APOLLO OPERATIONS HANDBOOK
BLOCK II SPACECRAFT

VOLUME 1
SPACECRAFT DESCRIPTION

CONTRACT NAS 9-150
EXHIBIT I, PARAGRAPH 10.3

CHANGE NOTICE

LATEST CHANGED PAGES SUPERSEDE
THE SAME PAGES OF PREVIOUS DATE

Insert changed pages into basic publication. Destroy superseded pages.

PUBLISHED UNDER AUTHORITY OF THE NATIONAL AERONAUTICS AND SPACE ADMINISTRATION,
SPACECRAFT SYSTEMS OPERATION BRANCH, FLIGHT CREW SUPPORT DIVISION.

SID 66-1508

15 APRIL 1969
CHANGED 15 OCT 1969

LIST OF EFFECTIVE PAGES

INSERT LATEST CHANGED PAGES. DESTROY SUPERSEDED PAGES.

NOTE: The portion of the text affected by the changes is indicated by a vertical line in the outer margins of the page.

TOTAL NUMBER OF PAGES IN THIS PUBLICATION IS 978, CONSISTING OF THE FOLLOWING:

Page	Issue
*Title	15 Oct 69
*A thru E	15 Oct 69
*i thru ii	15 Oct 69
iii thru iv	Basic
*v	15 Oct 69
vi	Basic
*vii thru viii	15 Oct 69
*1-1	15 Oct 69
1-2 thru 1-7	Basic
1-8 thru 1-9	16 July 69
1-10	Basic
*1-11	15 Oct 69
1-12 thru 1-20	Basic
1-21	16 July 69
1-22 thru 1-34	Basic
*1-35	15 Oct 69
1-36 thru 1-38	16 July 69
1-38A thru 1-38B	16 July 69
1-39 thru 1-52	Basic
2-1 thru 2-2	Basic
2.1-1	Basic
2.1-2 thru 2.1-4	16 July 69
2.1-5	Basic
2.1-6	16 July 69
2.2-1 thru 2.2-37	16 July 69
*2.2-38 thru 2.2-42	15 Oct 69
*2.2-42A thru 2.2-42B	15 Oct 69
2.3-1 thru 2.3-4	Basic
*2.3-5	15 Oct 69
2.3-6	16 July 69
2.3-7 thru 2.3-14	Basic
*2.3-15 thru 2.3-16	15 Oct 69
*2.3-16A thru 2.3-16D	15 Oct 69
*2.3-17	15 Oct 69
2.3-18 thru 2.3-23	Basic
*2.3-24 thru 2.3-25	15 Oct 69
2.3-26	Basic
2.3-27 thru 2.3-28	16 July 69
*2.3-29	15 Oct 69
2.3-30 thru 2.3-31	Basic
*2.3-32 thru 2.3-36	15 Oct 69
*2.3-36A thru 2.3-36B	15 Oct 69
*2.3-37	15 Oct 69
2.3-38	16 July 69
*2.3-39	15 Oct 69
2.3-40	Basic
*2.3-41	15 Oct 69
2.3-42	Basic
*2.3-43	15 Oct 69
2.3-44	Basic
*2.3-45	15 Oct 69
2.3-46	Basic
2.3-47	16 July 69
*2.3-48 thru 2.3-50	15 Oct 69
*2.3-50A thru 2.3-50D	15 Oct 69
2.3-51	16 July 69
*2.3-52	15 Oct 69
2.3-53	16 July 69
*2.3-54 thru 2.3-57	15 Oct 69
2.3-58 thru 2.3-60	Basic
2.3-61 thru 2.3-62	16 July 69
*2.3-63 thru 2.3-68	15 Oct 69

*The asterisk indicates pages changed, added, or deleted by the current change.

Manuals will be distributed as directed by the NASA Apollo Project Office. All requests for manuals should be directed to the NASA Apollo Spacecraft Project Office at Houston, Texas.

RECORD OF PUBLICATION

This issue of the Apollo Operations Handbook, Block II, Volume 1, dated 15 April 1969, constitutes a basic issue of the handbook - Volume 1. Subsequent changes may be issued to maintain information current with the spacecraft configuration through completion of its mission. This record will reflect the publication date of any released changes.

Basic Date	Change Date
15 April 1969	16 July 1969
	15 Oct 1969

LIST OF EFFECTIVE PAGES

INSERT LATEST CHANGED PAGES. DESTROY SUPERSEDED PAGES.

NOTE: The portion of the text affected by the changes is indicated by a vertical line in the outer margins of the page.

Page	Issue
2.4-1	16 July 69
2.4-2	Basic
*2.4-3 thru 2.4-4	15 Oct 69
2.4-5 thru 2.4-6	16 July 69
2.4-7 thru 2.4-12	Basic
*2.4-13	15 Oct 69
2.4-14	16 July 69
2.4-15 thru 2.4-19	Basic
2.4-20	16 July 69
*2.4-21 thru 2.4-22	15 Oct 69
2.4-23 thru 2.4-26	Basic
*2.4-27 thru 2.4-28	15 Oct 69
2.4-29 thru 2.4-31	Basic
2.4-32	16 July 69
*2.4-33 thru 2.4-35	15 Oct 69
2.4-36 thru 2.4-38	Basic
*2.4-39	15 Oct 69
2.4-40	Basic
2.4-41 thru 2.4-44	16 July 69
2.4-45	Basic
2.4-46 thru 2.4-48	16 July 69
2.5-1	16 July 69
2.5-2 thru 2.5-8	Basic
2.5-9 thru 2.5-10	16 July 69
2.5-11 thru 2.5-20	Basic
2.5-21	16 July 69
2.5-22 thru 2.5-25	Basic
*2.5-26	15 Oct 69
2.5-27 thru 2.5-40	Basic
*2.5-41 thru 2.5-42	15 Oct 69
2.5-43 thru 2.5-50	Basic
2.6-1	16 July 69
2.6-2 thru 2.6-11	Basic
2.6-12 thru 2.6-14	16 July 69
2.6-15	Basic
2.6-16 thru 2.6-17	16 July 69
2.6-18 thru 2.6-28	Basic
2.6-29	16 July 69
2.6-30 thru 2.6-34	Basic
2.6-35 thru 2.6-36	16 July 69
*2.6-37 thru 2.6-38	15 Oct 69
2.6-39 thru 2.6-47	Basic
2.6-48	16 July 69
2.6-49 thru 2.6-53	Basic
2.6-54	16 July 69
2.6-55 thru 2.6-60	Basic
2.7-1 thru 2.7-13	Basic
*2.7-14 thru 2.7-15	15 Oct 69
2.7-16 thru 2.7-24	Basic
*2.7-25 thru 2.7-30	15 Oct 69
2.7-31 thru 2.7-34	Basic
2.8-1	Basic
*2.8-2	15 Oct 69
2.8-3 thru 2.8-22	Basic
*2.8-23	15 Oct 69
2.8-24	Basic
*2.8-24A thru 2.8-24B	15 Oct 69
*2.8-25	15 Oct 69
2.8-26 thru 2.8-59	Basic
*2.8-60 thru 2.8-62	15 Oct 69
2.9-1 thru 2.9-2	Basic
*2.9-3	15 Oct 69
2.9-4 thru 2.9-11	Basic
*2.9-12 thru 2.9-13	15 Oct 69
2.9-14 thru 2.9-20	Basic
*2.9-21 thru 2.9-26	15 Oct 69
2.9-27 thru 2.9-31	Basic
*2.9-32	15 Oct 69

*The asterisk indicates pages changed, added, or deleted by the current change.

Manuals will be distributed as directed by the NASA Apollo Project Office. All requests for manuals should be directed to the NASA Apollo Spacecraft Project Office at Houston, Texas.

LIST OF EFFECTIVE PAGES

INSERT LATEST CHANGED PAGES. DESTROY SUPERSEDED PAGES.

NOTE: The portion of the text affected by the changes is indicated by a vertical line in the outer margins of the page.

Page	Issue
2.9-33 thru 2.9-34.	Basic
*2.9-35	15 Oct 69
2.9-36 thru 2.9-37.	Basic
*2.9-38	15 Oct 69
2.9-39 thru 2.9-50.	Basic
*2.9-51 thru 2.9-52.	15 Oct 69
2.9-53 thru 2.9-70.	Basic
2.10-1 thru 2.10-2.	16 July 69
2.10-2A thru 2.10-2B	16 July 69
2.10-3	16 July 69
2.10-4	Basic
2.10-5 thru 2.10-6.	16 July 69
*2.10-7	15 Oct 69
2.10-8 thru 2.10-10	16 July 69
2.11-1	Basic
*2.11-2	15 Oct 69
2.11-3 thru 2.11-4.	Basic
2.12-1	16 July 69
*2.12-2 thru 2.12-8.	15 Oct 69
*2.12-8A thru 2.12-8B	15 Oct 69
*2.12-9	15 Oct 69
2.12-10 thru 2.12-11.	Basic
*2.12-12	15 Oct 69
*2.12-12A thru 2.12-12B	15 Oct 69
*2.12-13	15 Oct 69
2.12-14	Basic
2.12-15	16 July 69
*2.12-16 thru 2.12-21	15 Oct 69
2.12-22	16 July 69
*2.12-23	15 Oct 69
2.12-24	16 July 69
*2.12-25	15 Oct 69
2.12-26 thru 2.12-27.	Basic
2.12-28	16 July 69
*2.12-29 thru 2.12-30.	15 Oct 69
*2.12-30A thru 2.12-30B	15 Oct 69
2.12-31 thru 2.12-32.	Basic
*2.12-33 thru 2.12-34.	15 Oct 69
2.12-35	Basic
*2.12-36	15 Oct 69
2.12-37	16 July 69
*2.12-38 thru 2.12-40.	15 Oct 69
2.12-41 thru 2.12-43.	16 July 69
*2.12-44	15 Oct 69
2.12-45 thru 2.12-47.	16 July 69
2.12-48 thru 2.12-54.	Basic
*2.12-55	15 Oct 69
2.12-56	Basic
2.12-57	16 July 69
2.12-58	Basic
*2.12-59	15 Oct 69
2.12-60 thru 2.12-62.	16 July 69
*2.12-62A thru 2.12-62B	15 Oct 69
2.12-63	16 July 69
2.12-64 thru 2.12-65.	Basic
*2.12-66 thru 2.12-70.	15 Oct 69
*2.12-70A thru 2.12-70B	15 Oct 69
*2.12-71 thru 2.12-72.	15 Oct 69
*2.12-72A thru 2.12-72D	15 Oct 69
*2.12-73 thru 2.12-74.	15 Oct 69
*2.12-74A thru 2.12-74B	15 Oct 69
2.12-75	Basic
2.12-76	16 July 69
*2.12-77 thru 2.12-78.	15 Oct 69
*2.12-78A thru 2.12-78D	15 Oct 69
*2.12-79 thru 2.12-80.	15 Oct 69
*2.12-80A thru 2.12-80B	15 Oct 69
*2.12-81	15 Oct 69

*The asterisk indicates pages changed, added, or deleted by the current change.

Manuals will be distributed as directed by the NASA Apollo Project Office. All requests for manuals should be directed to the NASA Apollo Spacecraft Project Office at Houston, Texas.

LIST OF EFFECTIVE PAGES

INSERT LATEST CHANGED PAGES. DESTROY SUPERSEDED PAGES.

NOTE: The portion of the text affected by the changes is indicated by a vertical line in the outer margins of the page.

Page	Issue
2.12-82 thru 2.12-84	Basic
2.12-85	16 July 69
*2.12-86 thru 2.12-88	15 Oct 69
2.12-89 thru 2.12-92	Basic
*2.12-93	15 Oct 69
2.12-94 thru 2.12-97	Basic
2.12-98	16 July 69
*2.12-99	15 Oct 69
2.12-100 thru 2.12-108	Basic
2.13-1 thru 2.13-8	16 July 69
*2.13-9 thru 2.13-10	15 Oct 69
2.13-11 thru 2.13-17	16 July 69
2.13-18 thru 2.13-22	Basic
2.13-23	16 July 69
2.13-24	Basic
*2.13-25	15 Oct 69
2.13-26 thru 2.13-36	Basic
*2.13-37 thru 2.13-38	15 Oct 69
2.13-39	16 July 69
2.13-40 thru 2.13-42	Basic
3-1 thru 3-11	Basic
*3-12	15 Oct 69
3-13	Basic
3-14	16 July 69
3-15 thru 3-34	Basic
3-35	16 July 69
3-36 thru 3-40	Basic
3-41	16 July 69
*3-42	15 Oct 69
3-43 thru 3-84	Basic
*3-85	15 Oct 69
3-86	Basic
3-87	16 July 69
*3-88	15 Oct 69
3-89	16 July 69
3-90 thru 3-96	Basic
3-97	16 July 69
*3-98	15 Oct 69
3-99 thru 3-225	Basic
*3-226	15 Oct 69
3-227 thru 3-274	Basic
*3-275	15 Oct 69
3-276 thru 3-298	Basic
*3-299 thru 3-306	15 Oct 69
A-1 thru A-8	Basic
I-1	Basic
I-2 thru I-5	16 July 69
I-6 thru I-7	Basic
I-8	16 July 69
*I-9	15 Oct 69
I-10	16 July 69
*I-11	15 Oct 69
I-12	Basic
*I-13	15 Oct 69
I-14	16 July 69
I-15 thru I-16	Basic
I-17	16 July 69
I-18	Basic
I-19	16 July 69
*I-20	15 Oct 69
I-21 thru I-22	16 July 69

*The asterisk indicates pages changed, added, or deleted by the current change.

Manuals will be distributed as directed by the NASA Apollo Project Office. All requests for manuals should be directed to the NASA Apollo Spacecraft Project Office at Houston, Texas.

LIST OF EFFECTIVE PAGES

INSERT LATEST CHANGED PAGES. DESTROY SUPERSEDED PAGES.

NOTE: The portion of the text affected by the changes is indicated by a vertical line in the outer margins of the page.

CHANGE INFORMATION

This handbook is subject to continuous change or revision on a priority basis to reflect current engineering or spacecraft configuration changes, or to improve content or arrangement. The content and changes are accounted for by the above List of Effective Pages, and by the following means:

Record of Publication. The publication date of the basic issue and each change issue is listed on page i as a record of all editions.

Page Change Date. Each page in this handbook has space for entering a change date. The latest publication date will be entered in this space each time a page is changed from the basic issue.

*The asterisk indicates pages changed, added, or deleted by the current change.

Manuals will be distributed as directed by the NASA Apollo Project Office. All requests for manuals should be directed to the NASA Apollo Spacecraft Project Office at Houston, Texas.

FOREWORD

Volume 1 of the Apollo Operations Handbook constitutes the description of all command service module systems. Volume 2 is separately bound, and contains performance data and crew operational procedures.

This document has been derived from the most current available Apollo Block II information, and its contents are restricted to the specific requirements of Block II vehicles SC 106 and subs unless otherwise noted.

Effectivity Designations (Volume 1).

Information pertaining to all Block II spacecraft has no designation.

Information pertaining to a specific spacecraft is designated by SC number.

NASA comments or suggested changes to this handbook should be addressed to the Spacecraft Systems Branch, CFSD, Office Code CF22, Telephone HU3-4371.

TABLE OF CONTENTS

Section	Title	Page
1	SPACECRAFT	1-1
1.1	INTRODUCTION	1-1
1.2	LAUNCH VEHICLE AND BOOSTER CONFIGURATION	1-2
1.2.1	Saturn V Launch Vehicle	1-2
1.3	APOLLO SPACECRAFT CONFIGURATION	1-4
1.3.1	Launch Escape Assembly	1-4
1.3.2	Command Module	1-4
1.3.3	Service Module	1-49
1.3.4	Spacecraft LM Adapter	1-50
2	SYSTEMS DATA	2-1
2.1	GUIDANCE AND CONTROL	2.1-1
2.1.1	Guidance and Control Systems Interface	2.1-1
2.1.2	Attitude Reference	2.1-1
2.1.3	Attitude Control	2.1-3
2.1.4	Thrust and Thrust Vector Control	2.1-5
2.2	GUIDANCE AND NAVIGATION SYSTEM (G&N)	2.2-1
2.2.1	Introduction	2.2-1
2.2.2	Functional Description	2.2-2
2.2.3	Major Component/Subsystem Description	2.2-6
2.2.4	Operational Modes	2.2-28
2.2.5	Power Distribution	2.2-38
2.3	STABILIZATION AND CONTROL SYSTEM (SCS)	2.3-1
2.3.1	Introduction	2.3-1
2.3.2	Controls, Sensors, and Displays	2.3-2
2.3.3	Attitude Reference Subsystem	2.3-14
2.3.4	Attitude Control Subsystem (ACS)	2.3-20
2.3.5	Thrust Vector Control (TVC)	2.3-39
2.3.6	Power Distribution	2.3-48
2.3.7	Entry Monitor System	2.3-52
2.4	SERVICE PROPULSION SYSTEM (SPS)	2.4-1
2.4.1	Functional Description	2.4-1
2.4.2	Major Component/Subsystem Description	2.4-7
2.4.3	Performance and Design Data	2.4-41
2.4.4	Operational Limitations and Restrictions	2.4-44

Section	Title	Page
2.5	REACTION CONTROL SYSTEM (RCS)	2.5-1
2.5.1	SM RCS Functional Description	2.5-1
2.5.2	SM RCS Major Component/Subsystem Description	2.5-11
2.5.3	SM RCS Performance and Design Data	2.5-22
2.5.4	SM RCS Operational Limitations and Restrictions	2.5-25
2.5.5	CM RCS Functional Description	2.5-25
2.5.6	CM RCS Major Component/Subsystem Description	2.5-31
2.5.7	CM RCS Performance and Design Data	2.5-45
2.5.8	CM RCS Operation Limitations and Restrictions	2.5-48
2.6	ELECTRICAL POWER SYSTEM	2.6-1
2.6.1	Introduction	2.6-1
2.6.2	Functional Description	2.6-2
2.6.3	Major Component/Subsystem Description	2.6-6
2.6.4	Performance and Design Data	2.6-45
2.6.5	Operational Limitations and Restrictions	2.6-46
2.6.6	Systems Test Meter	2.6-49
2.6.7	Command Module Interior Lighting	2.6-51
2.7	ENVIRONMENTAL CONTROL SYSTEM (ECS)	2.7-1
2.7.1	Introduction	2.7-1
2.7.2	Functional Description	2.7-2
2.7.3	Oxygen Subsystem	2.7-6
2.7.4	Pressure Suit Circuit	2.7-11
2.7.5	Water Subsystem	2.7-14
2.7.6	Water-Glycol Coolant Subsystem	2.7-16
2.7.7	Electrical Power Distribution	2.7-24
2.7.8	ECS Performance and Design Data	2.7-24
2.8	TELECOMMUNICATION SYSTEM	2.8-1
2.8.1	Introduction	2.8-1
2.8.2	Functional Description	2.8-2
2.8.3	Major Component/Subsystem Description	2.8-6
2.8.4	Operational Limitations and Restrictions	2.8-58
2.9	SEQUENTIAL SYSTEMS	2.9-1
2.9.1	Introduction	2.9-1
2.9.2	General Description	2.9-5
2.9.3	Functional Description	2.9-16
2.9.4	Operational Description	2.9-20
2.9.5	Performance and Design Data	2.9-54
2.9.6	Operational Limitations and Restrictions	2.9-69
2.10	CAUTION AND WARNING SYSTEM	2.10-1
2.10.1	Introduction	2.10-1
2.10.2	Functional Description	2.10-1
2.10.3	Major Component/Subsystem Description	2.10-1
2.10.4	Operational Limitations and Restrictions	2.10-3

Section	Title	Page
2.11	MISCELLANEOUS SYSTEMS DATA	2.11-1
2.11.1	Introduction	2.11-1
2.11.2	Timers	2.11-1
2.11.3	Accelerometer (G-Meter)	2.11-1
2.11.4	Command Module Uprighting System	2.11-1
2.12	CREW PERSONAL EQUIPMENT	2.12-1
2.12.1	Introduction	2.12-1
2.12.2	Spacesuits	2.12-10
2.12.3	Crewman Restraints	2.12-24
2.12.4	Sighting and Illumination Aids	2.12-37
2.12.5	Mission Operational Aids	2.12-56
2.12.6	Crew Life Support	2.12-77
2.12.7	Medical Supplies and Equipment	2.12-94
2.12.8	Radiation Monitoring and Measuring Equipment	2.12-98
2.12.9	Postlanding Recovery Aids	2.12-100
2.12.10	Equipment Stowage	2.12-108
2.13	DOCKING AND TRANSFER	2.13-1
2.13.1	Introduction	2.13-1
2.13.2	Functional Description	2.13-8
2.13.3	Component Description	2.13-11
2.13.4	Performance and Design Data	2.13-39
2.13.5	Operational Limitations and Restrictions	2.13-41
3	CONTROLS AND DISPLAYS	3-1
3.1	INTRODUCTION	3-1
3.2	CONTROLS/DISPLAYS LOCATOR INDEX	3-2
Appendix		
A	ABBREVIATIONS AND SYMBOLS	A-1
	ALPHABETICAL INDEX	I-1

SECTION I

SPACECRAFT

1.1 INTRODUCTION.

The Apollo Operations Handbook consists of two volumes, 1 and 2. Volume 1 is the Spacecraft Description and Volume 2 is the Operational Procedures. Volume 1 has three sections: section 1 describes Apollo spacecraft general structure and mechanical systems; section 2 describes the Apollo spacecraft systems; and section 3, the Apollo spacecraft controls and displays. Volume 2 continues with two procedural sections: section 4 lists the steps of normal and backup procedures of all mission phases; and section 5 contains the contingency procedures for aborts, malfunctions, and emergencies.

Section 1 first describes the launch vehicle boosters that propel the Apollo spacecraft and lunar module (LM) into earth orbit and translunar injection. This description is followed by a fore to aft description of the Apollo spacecraft, which includes the launch escape assembly, command module with mechanical systems, service module, and the spacecraft lunar module adapter.

The spacecraft launch vehicle and booster combination have various designations. The following chart summarizes the mission letter designator, Apollo number, launch vehicle designator, and CSM number for the manned flights. A mission is defined and then given a letter designator; thus, the Mission Letter Designator. The Apollo Number designates the numerical order of launching, manned or unmanned, and is used primarily as a news media reference. The Launch Vehicle Designator indicates the booster configuration of the launch vehicle. The 200 series designates the Saturn IB and the 500 series designates the Saturn V. The command service module (CSM) assigned to the mission has a CSM number designator of three digits.

Mission Letter Designator	Apollo Number	Launch Vehicle Designator	CSM Number
Mission C	Apollo 7	Saturn IB (205)	101
Mission D	Apollo 8	Saturn V (503)	103
Mission E	Apollo 9	Saturn V (504)	104
Mission F	Apollo 10	Saturn V (505)	106
Mission G	Apollo 11	Saturn V (506)	107
Mission H-1	Apollo 12	Saturn V (507)	108
Mission H-2	Apollo 13	Saturn V (508)	109
Mission H-3	Apollo 14	Saturn V (509)	110

When improvements to the spacecraft systems are made, the system is modified. Modifications take effect on different spacecraft so the term "effectivity" is used. The effectivity of the Apollo spacecraft systems in this handbook is for CSM 106 and subsequent (subs) unless otherwise stated.

1.2 LAUNCH VEHICLE AND BOOSTER CONFIGURATION.

The launch vehicle used in the Apollo program is illustrated in figure 1-1. The Saturn V is programmed for earth orbital missions and/or lunar missions. The general configuration of the launch vehicle boosters is summarized in the following paragraphs.

1.2.1 SATURN V LAUNCH VEHICLE.

The Saturn V is a three-stage vehicle consisting of an S-IC first stage, S-II second stage, and an S-IVB third stage.

1.2.1.1 First Stage S-IC Booster.

The S-IC is manufactured by the Boeing Company and uses five Rocketdyne F-1 engines. Each F-1 engine, burning RP-1 and liquid oxygen, produces 1,500,000 pounds of thrust for an overall first stage boost of 7,500,000 pounds of thrust. One engine will be rigidly attached at the stage centerline, while the others will gimbal for vehicle control.

1.2.1.2 Second Stage S-II Booster.

The S-II, or second-stage, is manufactured by the Space Division of North American Rockwell Corporation. The second-stage employs five Rocketdyne J-2 engines. Each J-2 engine burns liquid hydrogen and liquid oxygen, and produces 200,000 pounds of thrust for an overall second-stage boost of 1,000,000 pounds. The gimbaled engines will be mounted in a square pattern, with the fifth engine rigidly mounted in the center.

1.2.1.3 Third Stage S-IVB Booster.

The S-IVB third-stage is manufactured by McDonnell Douglas Corporation. The S-IVB employs a single Rocketdyne J-2 engine, burning liquid hydrogen and liquid oxygen to produce 200,000 pounds of thrust.

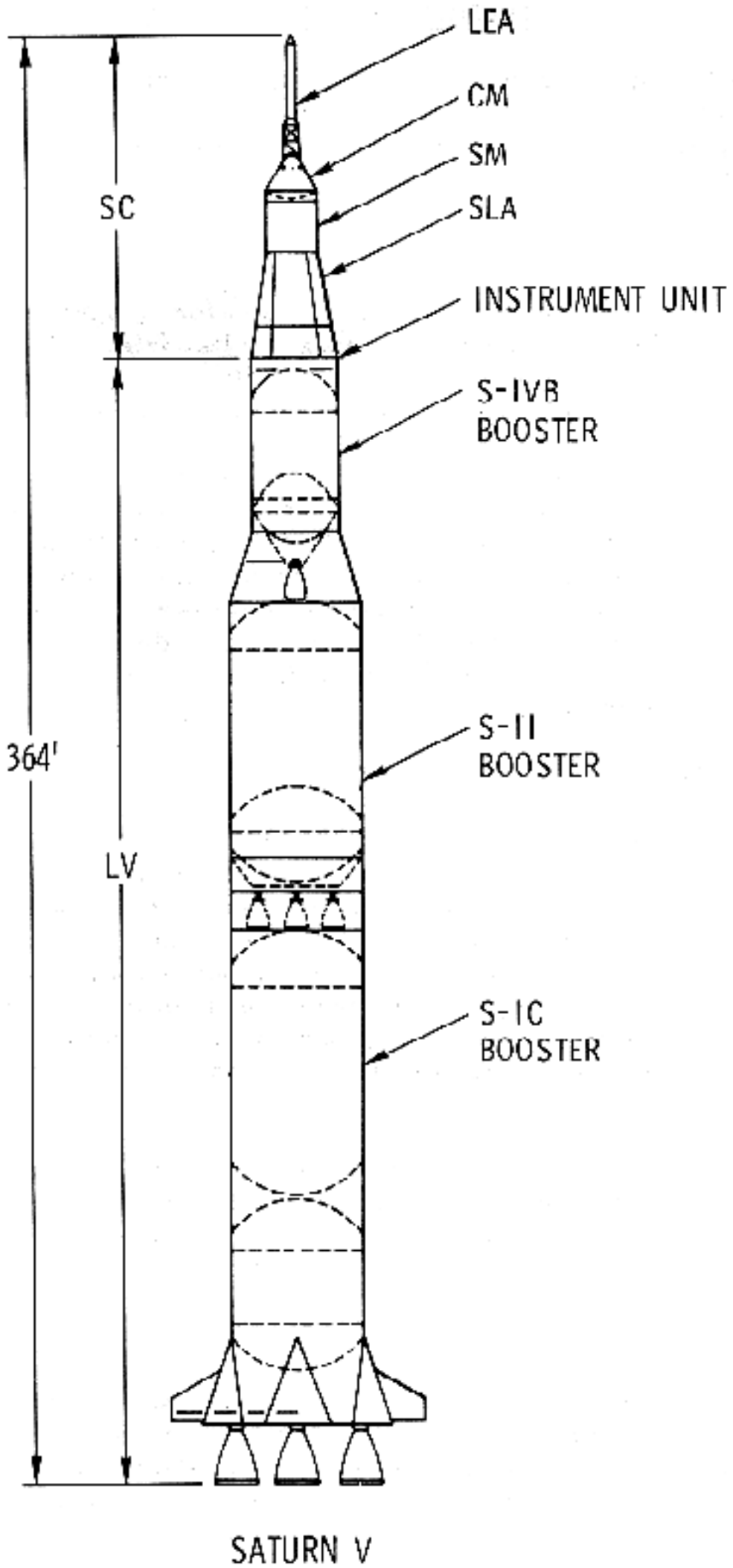

SM-2A-2031

Figure 1-1. Apollo Launch Vehicle

1.3 APOLLO SPACECRAFT CONFIGURATION.

The Block II spacecraft consists of a launch escape assembly (LEA), command module (CM), service module (SM), the spacecraft lunar module adapter (SLA), and the lunar module (LM). The reference system and stations are shown in figure 1-2.

1.3.1 LAUNCH ESCAPE ASSEMBLY.

The LEA (figure 1-3) provides the means for separating the CM from the launch vehicle during pad or suborbital aborts. This assembly consists of a Q-ball instrumentation assembly (nose cone), ballast compartment, canard surfaces, pitch control motor, tower jettison motor, launch escape motor, a structural skirt, an open-frame tower, and a boost protective cover (BPC). The structural skirt at the base of the housing, which encloses the launch escape rocket motors, is secured to the forward portion of the tower. The BPC (figure 1-4) is attached to the aft end of the tower to protect the CM from heat during boost, and from exhaust damage by the launch escape and tower jettison motors. Explosive nuts, one in each tower leg well, secure the tower to the CM structure. (For additional information, refer to the sequential systems in section 2, subsection 2.9).

1.3.2 COMMAND MODULE.

The CM (figure 1-5), the spacecraft control center, contains necessary automatic and manual equipment to control and monitor the spacecraft systems; it also contains the required equipment for safety and comfort of the flight crew. The module is an irregular-shaped, primary structure encompassed by three heat shields (coated with ablative material and joined or fastened to the primary structure) forming a truncated, conic structure. The CM consists of a forward compartment, a crew compartment, and an aft compartment for equipment and a crew. (See figure 1-6.)

The command module is conical shaped, 11 feet 1.5 inches long, and 12 feet 6.5 inches in diameter without the ablative material. The ablative material is non-symmetrical and adds approximately 4 inches to the height and 5 inches to the diameter.

1.3.2.1 Forward Compartment.

The forward compartment (figure 1-6) is the area outside the forward access tunnel, forward of the crew compartment forward bulkhead and covered by the forward heat shield. Four 90-degree segments around the perimeter of the tunnel contain the recovery equipment, two negative-pitch reaction control system engines, and the forward heat shield release mechanism. Most of the equipment in the forward compartment consists of earth landing (recovery) system (ELS) components.

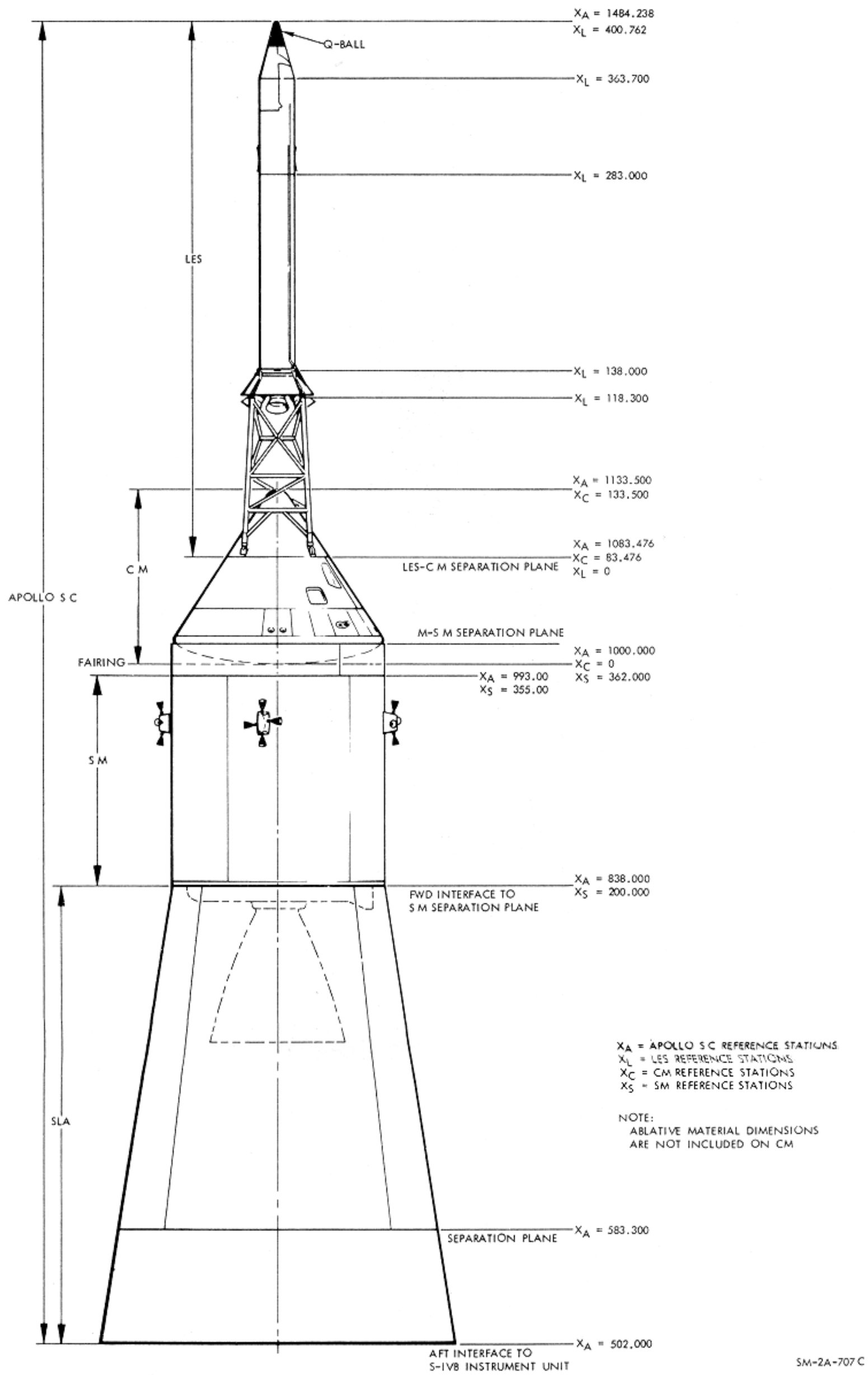

Figure 1-2. Block II Spacecraft Reference Stations

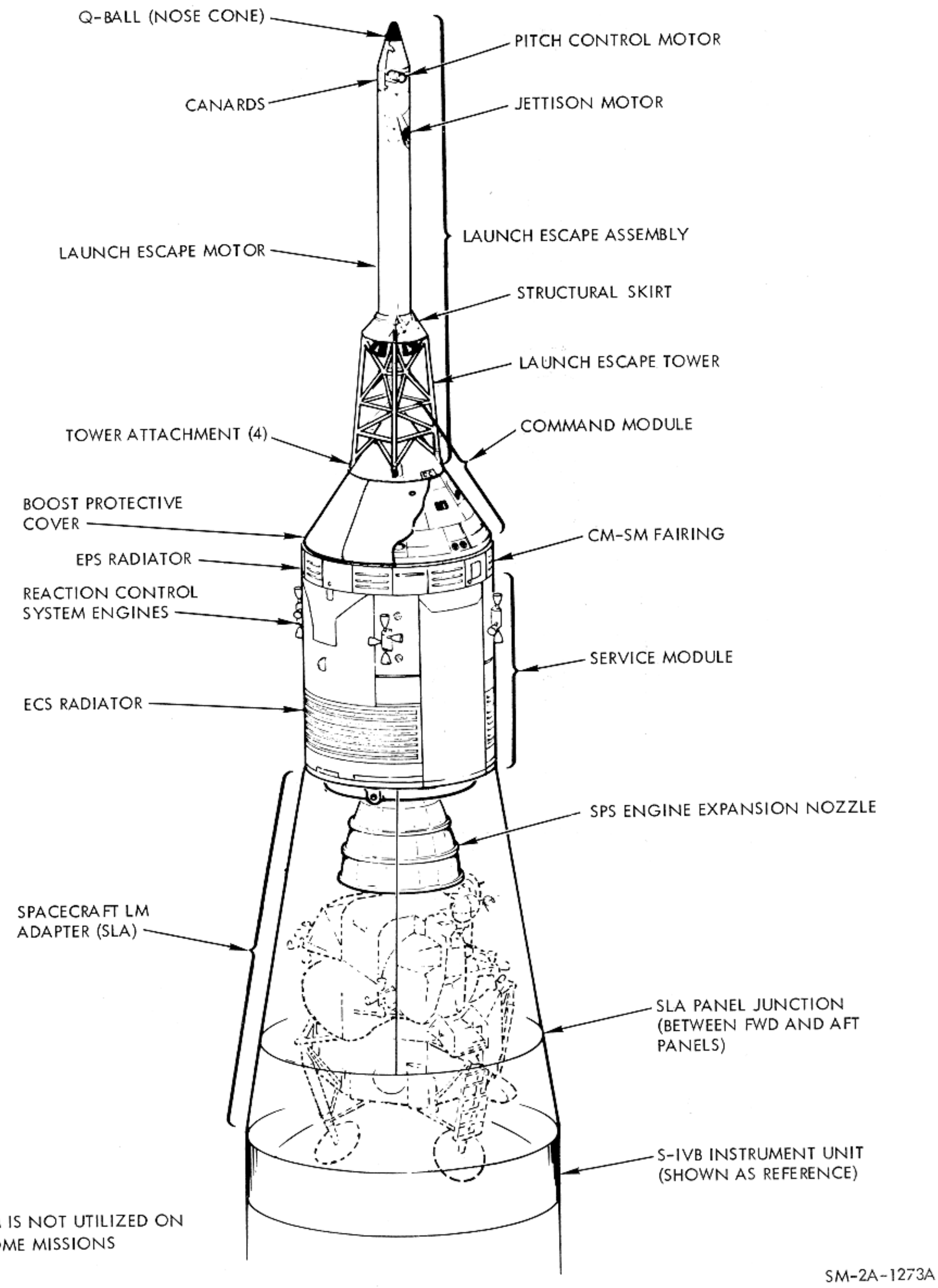

Figure 1-3. Block II Spacecraft Configuration

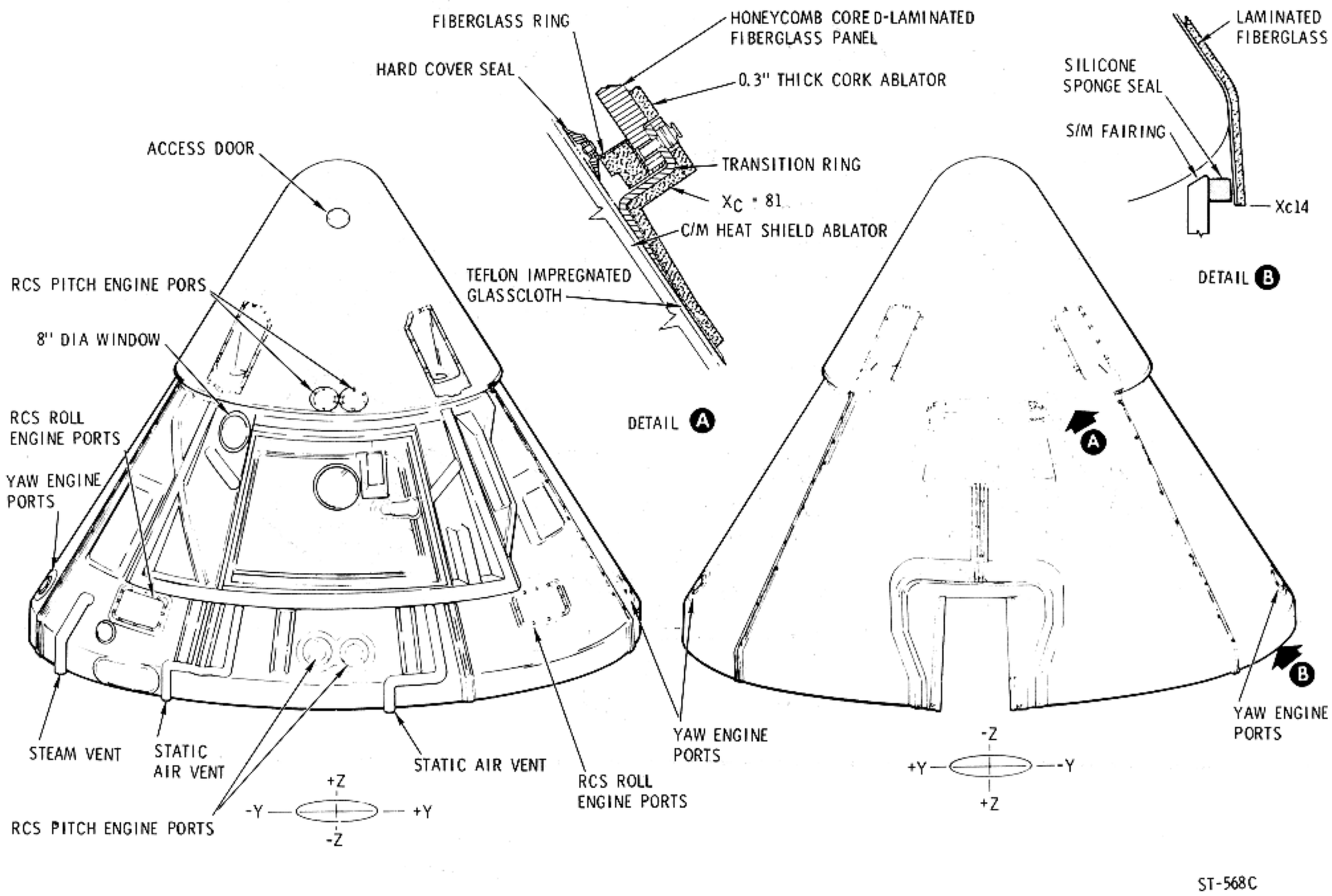

Figure 1-4. Boost Protective Cover

The forward heat shield is made of brazed stainless steel honeycomb covered with ablative material. It contains four recessed fittings which permit the launch escape tower to be attached to the CM inner structure. Jettison thrusters separate the forward heat shield from the CM after entry or after the LEA is separated during an abort.

1.3.2.2 Aft Compartment.

The aft compartment (figure 1-6) is the area encompassed by the aft portion of the crew compartment heat shield, aft heat shield, and aft portion of the primary structure. This compartment contains ten reaction control engines, impact attenuation structure, instrumentation, and

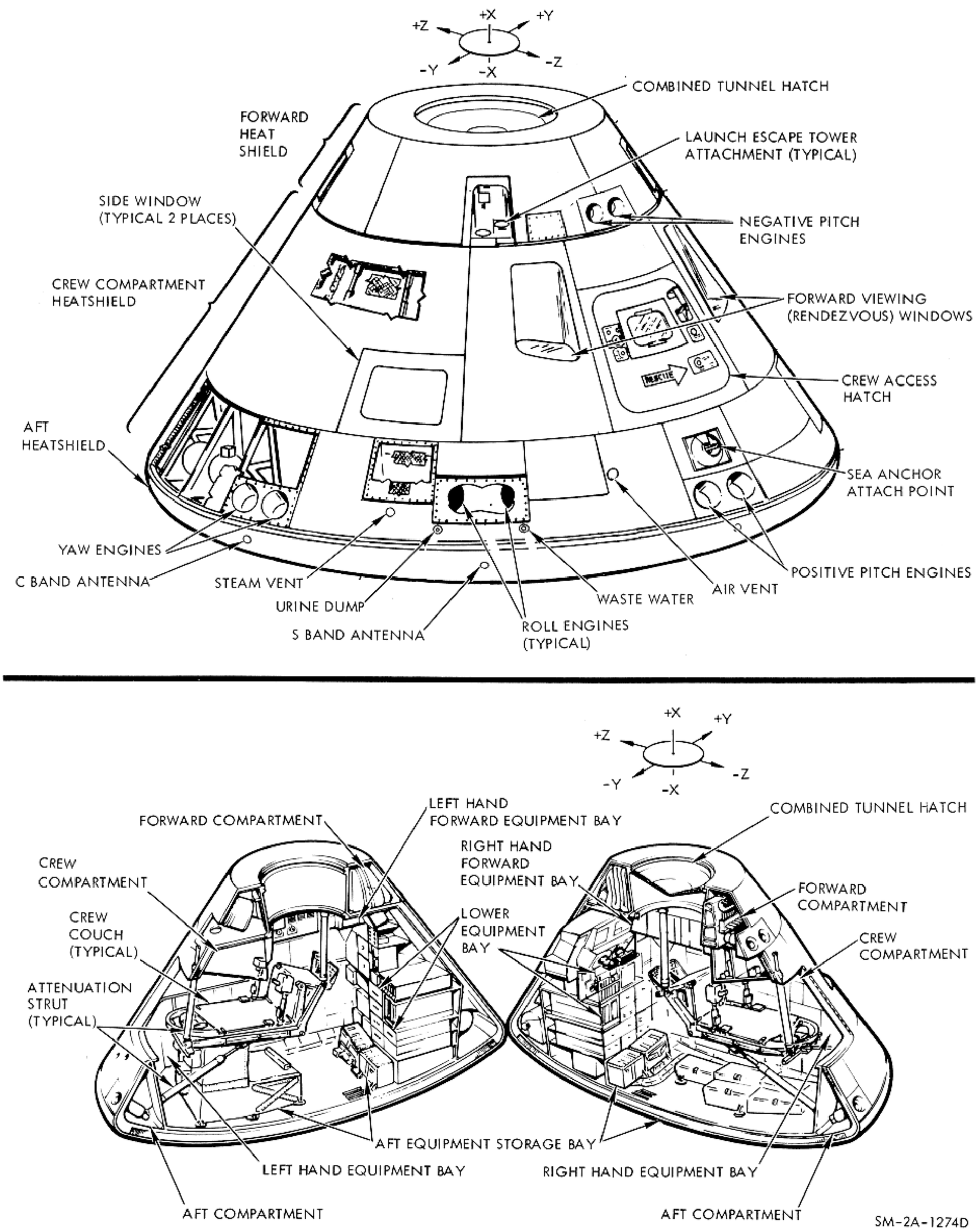

Figure 1-5. Block II Command Module

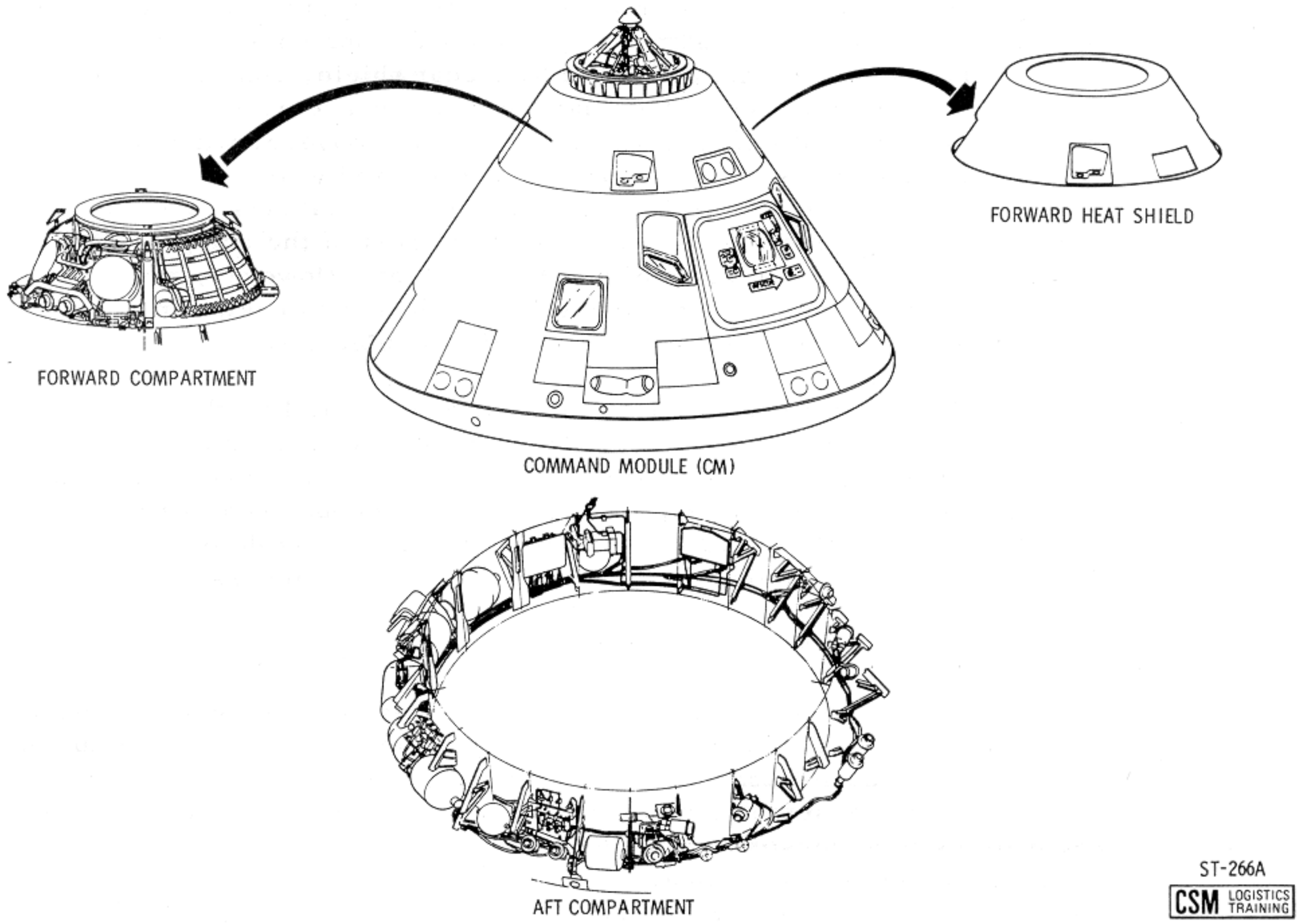

Figure 1-6. CM External Compartments

storage tanks for water, fuel oxidizer, and gaseous helium. Four crushable ribs, along the spacecraft +Z axis, are provided as part of the impact attenuation structure to absorb energy during impact.

The aft heat shield, which encloses the large end of the CM, is a shallow, spherically contoured assembly. It is made of the same type of materials as the forward heat shield. However, the ablative material on this heat shield has a greater thickness for the dissipation of heat during entry. External provisions are made on this heat shield for connecting the CM to the SM.

1.3.2.3 Crew Compartment.

The crew compartment or inner structure (figure 1-7) is a sealed cabin with pressurization maintained by the environmental control system (ECS). The compartment, protected by a heat shield, contains controls and displays for operation of the spacecraft and spacecraft systems, crew couches and restraint harness assemblies, hatch covers, window shades, etc., and is provided with crew equipment, food and water, waste management provisions, and survival equipment. Access hatches, observation windows, and equipment bays are attached as part of the compartment structure. The interior volume is 366 cubic feet. However, the lower, right, and left equipment bays, lockers, couches, and crewman occupy 156 cubic feet, leaving a usable volume of 210 cubic feet.

The crew compartment heat shield (figure 1-5), like the forward heat shield, is made of brazed stainless-steel honeycomb and covered with ablative material. This heat shield, or outer structure, contains the SC umbilical connector outlet, ablative plugs, a copper heat sink for the optical sighting ports in the lower equipment bay, two side observation windows, two forward viewing windows, and the side access hatch.

1.3.2.3.1 Crew Compartment and Equipment Bays.

Each crew member has personal and accessory equipment provided for his use in the crew compartment. Major items of personal equipment consist of a spacesuit assembly with attaching hose and umbilical, a communications assembly, biomedical sensors, and radiation dosimeters. Major items of accessory equipment shared by the crew consist of an in-flight tool set and a medical kit. For a detailed list of crew equipment, refer to section 2.12. General items contained in the CM equipment and stowage bays are listed in figures 1-26 and 1-27.

1.3.2.3.2 Protection Panels.

The protection panels prevent loose equipment (tools, etc.) and debris from getting into the various nooks and crevices in the crew compartment. They also suppress fire by closing out the equipment bays with covers around the aft bulkhead, and protect the ECS tubing from the zero g activities of the crew and the prelaunch activities of ground personnel. The location and configuration of the protection panels are illustrated in figure 1-8.

The protection panels (also referred to as close-out panels) are a series of aluminum panels and covers that fair the irregular structure to the equipment bays and wire troughs and covers. The panels vary in thickness and are attached to secondary structures by captivated fasteners. Access panels and penetrations are located at or over equipment and connectors needed for the mission.

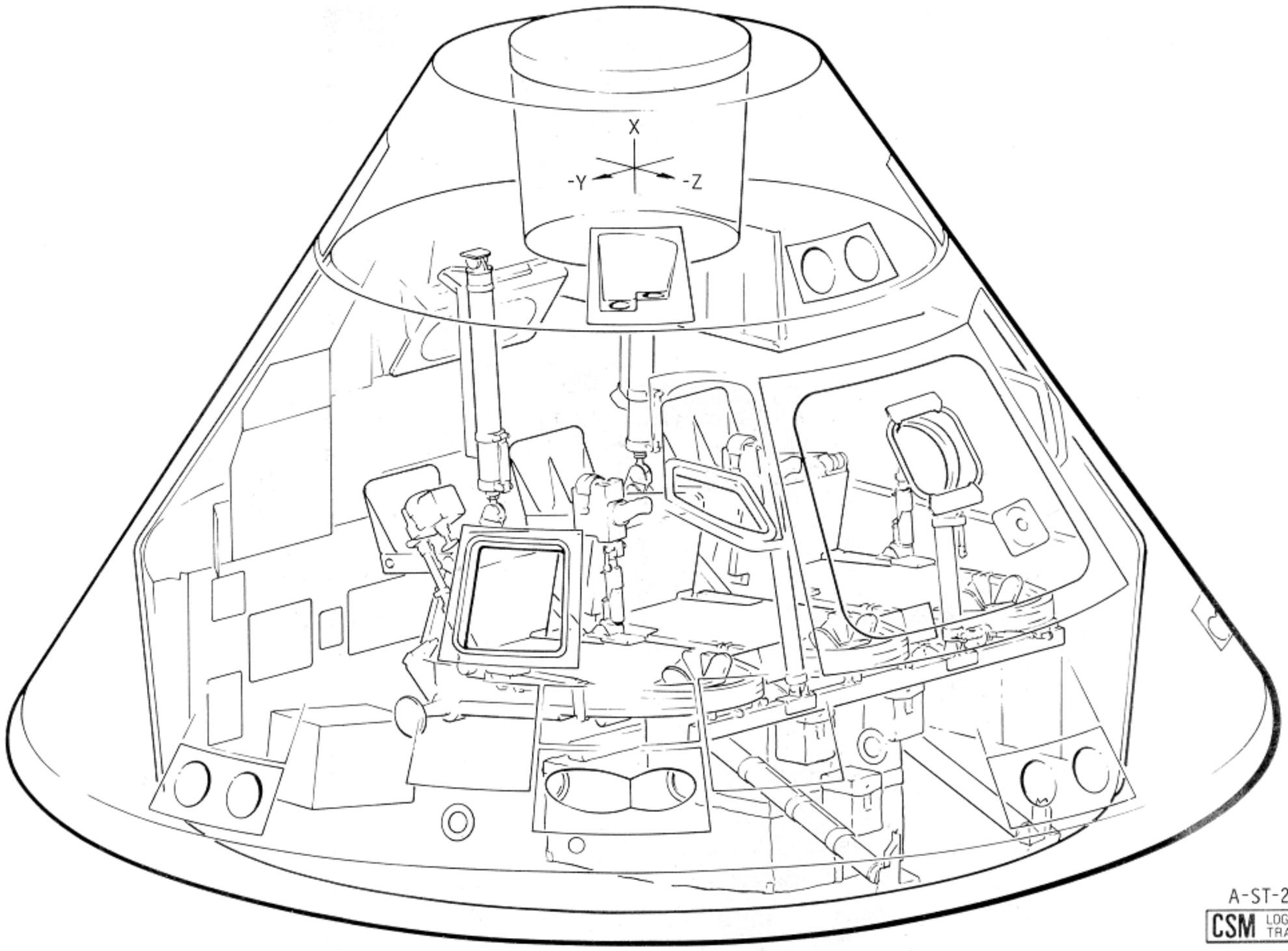

Figure 1-7. Apollo Crew Compartment

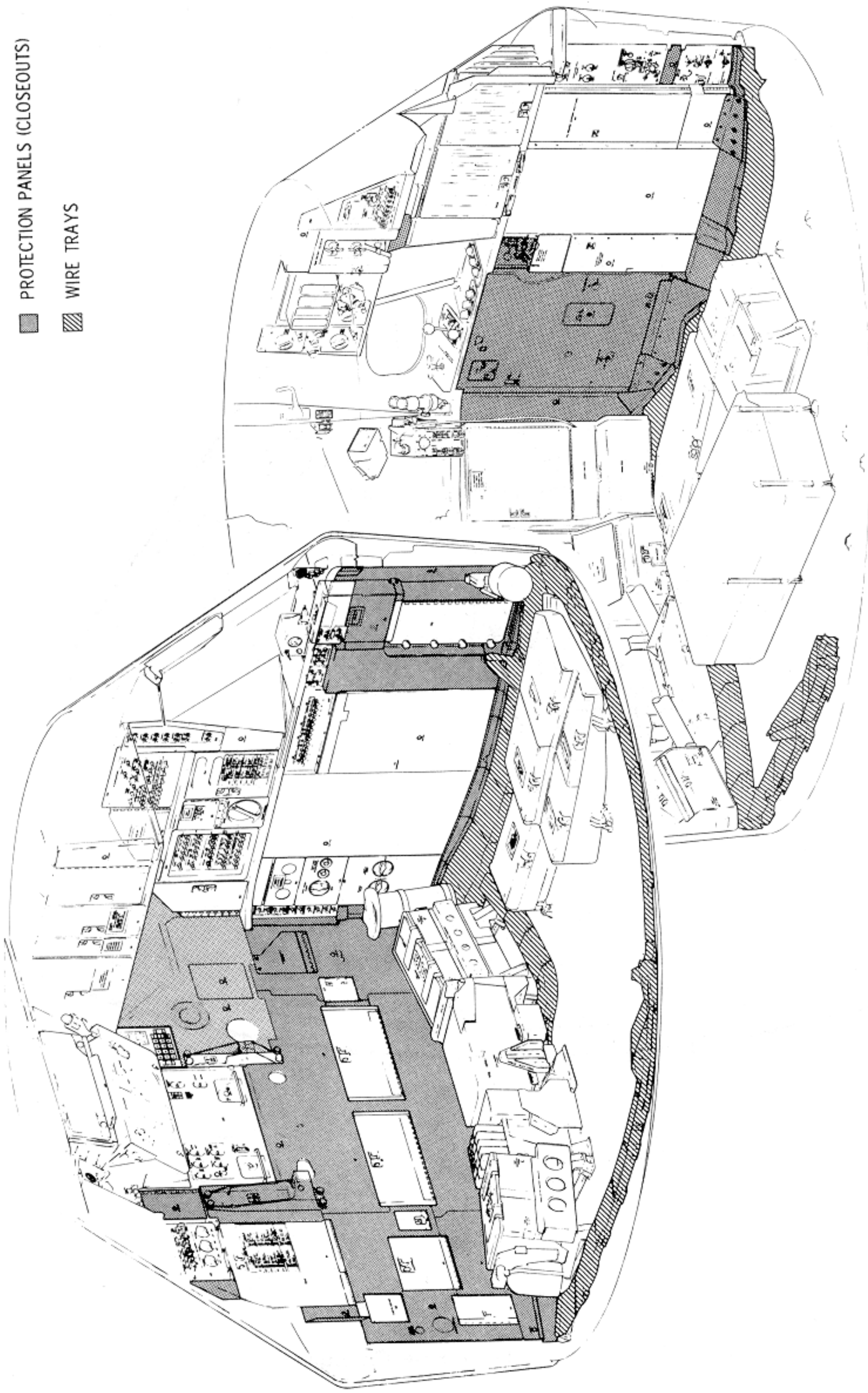

Figure 1-8. Closeout or Protection Panels

1.3.2.3.3 Loose Equipment Stowage.

The stowage of numerous items of personal and systems loose equipment is in compartments and lockers (figure 1-9). Compartments are part of the crew compartment structure. Equipment is placed in "cushions" and inserted into the compartments. The aluminum lockers are packed with equipment in an assembly building and are quickly attached to the aft bulkhead and equipment bays a short time before launch. This allows aft bulkhead access during spacecraft ground processing. The compartment and locker doors have squeeze-type latches and can be opened and closed with one hand.

1.3.2.4 SC Controls and Displays.

The controls and displays (panels, switches, gages, valve handles, etc.) for operation of the spacecraft and its systems are located throughout the crew compartment. The location, nomenclature, function, and power source of the controls and displays are provided in section 3 of this handbook. The panel numbers indicate the equipment bay and area of location. The panel numbering system is shown in figure 1-10. For instance, the 100 to 199 series will be located in the lower equipment bay (LEB). The LEB is divided into panel areas such as 100-119 in the upper left, 120-139 in the upper center, etc. The advantage of this system is (given a panel number and knowing the numbered areas) to enable the crew to pinpoint the area and locate the panel very quickly.

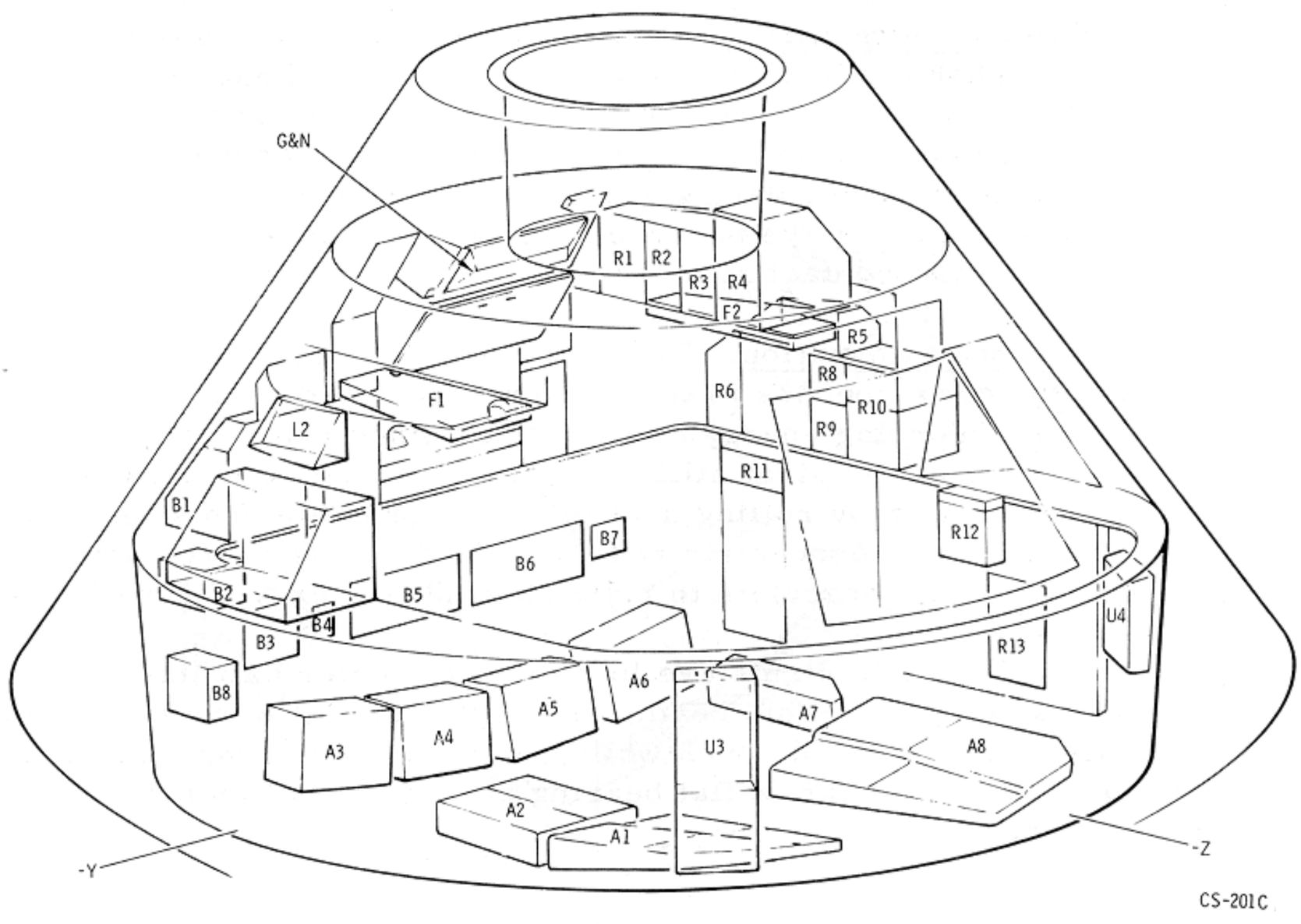

Figure 1-9. Stowage Compartments and Lockers

1.3.2.5 Crew Couches.

The primary function of the couches is to support the crew during accelerations/decelerations up to 30 g forward and aft (±X), 18 g up and down (±Z), and 15 g laterally (±Y). Because the critical g-load is during landing, an attenuation system is used to reduce the deceleration load on the crew. There are two attenuation subsystems, external and internal. Secondary function of the crew couches is to position crew at duty stations and provide support for the translation and rotation hand controls, lights, and other equipment.

The couches are designated (structurally) as left, center, and right; by crew position they are (left to right) Command (CDR), CSM Pilot (CMP), and LM Pilot (LMP).

1.3.2.5.1 CM Impact Attenuation System.

During a water impact, the CM deceleration force will vary from 12 to 40 g, depending on wave shape and horizontal velocity at impact. The impact attenuation system reduces the impact forces on the crew to a value within their tolerance level. A major portion of the energy (75 to 90 percent) is absorbed by the impact surface (water) and the deformation of the CM structure. The impact system is divided into two subsystems: external and internal, which are described in the following paragraphs.

External Attenuation. The external attenuation subsystem consists of four crushable ribs installed in the aft compartment (figure 1-11). The ribs, located between the inner and outer structure in the vicinity of the +Z axis, are constructed of bonded laminations of corrugated aluminum. The CM is suspended, during atmospheric descent, at a 27.5-degree angle (hang angle) by the parachute subsystem. Because of the hang angle, the first point of contact at impact is in the area of the crushable ribs.

Internal Attenuation. Eight attenuation struts are provided for connecting the crew couches to the CM inner structure. Each strut is capable of absorbing energy at a predetermined rate through "cyclic struts." The cyclic strut utilizes cyclic material deformation concept of energy absorption by rolling ductile metal torus elements (bracelets) in friction between a concentric rod and cylinder. The force applied to the struts causes the bracelets to roll, absorbing energy (figure 1-12).

Two Y-Y axis struts are located at the outer extremities of the couch assembly at the hip beam. The cylinder end of each strut is firmly attached to the unitized couch while the piston end, containing a flat circular foot, reacts against a flat bearing plate (attenuation panel) attached to the structure.

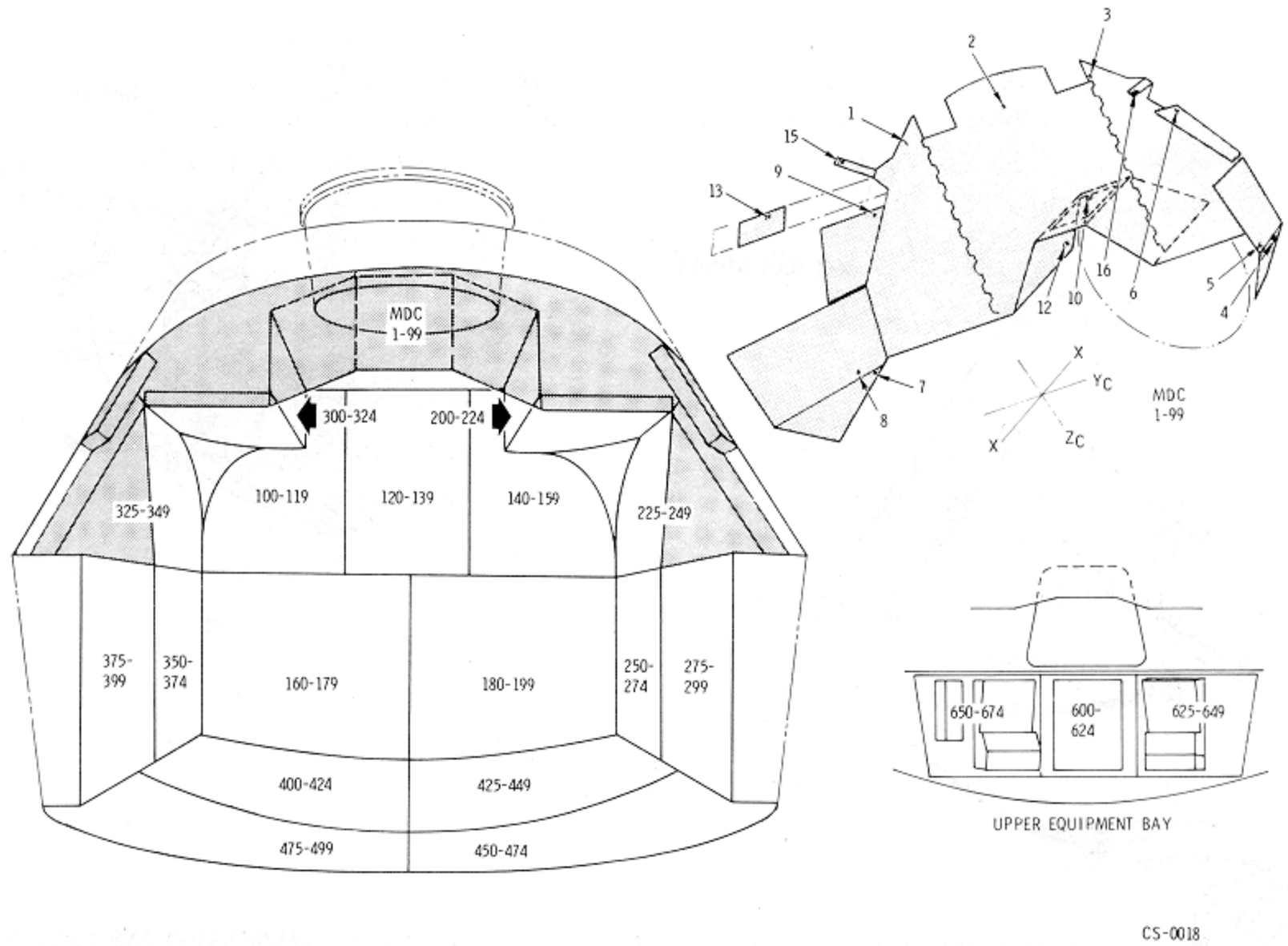

Figure 1-10. Controls and Displays Panel Numbering System

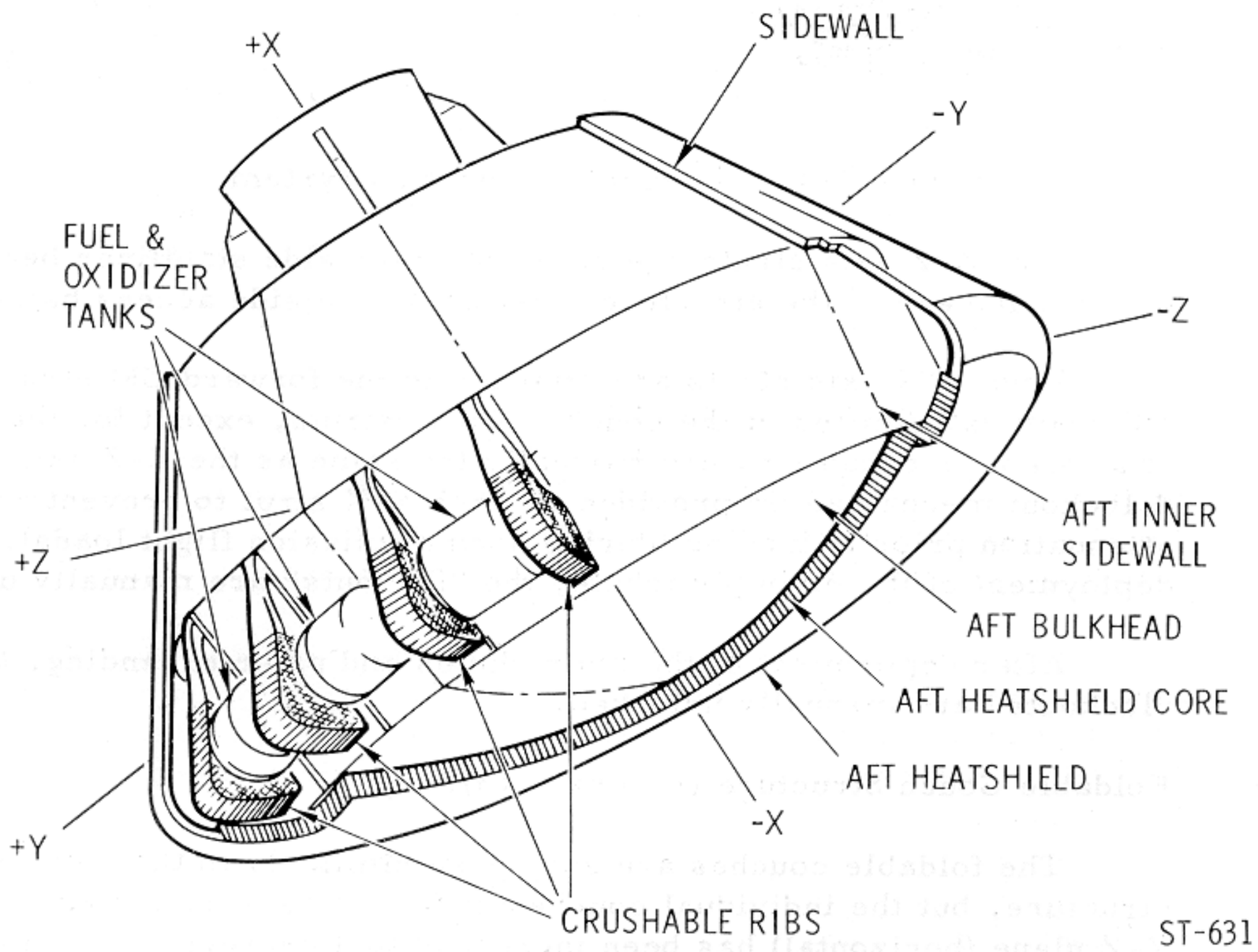

Figure 1-11. External Attenuation System

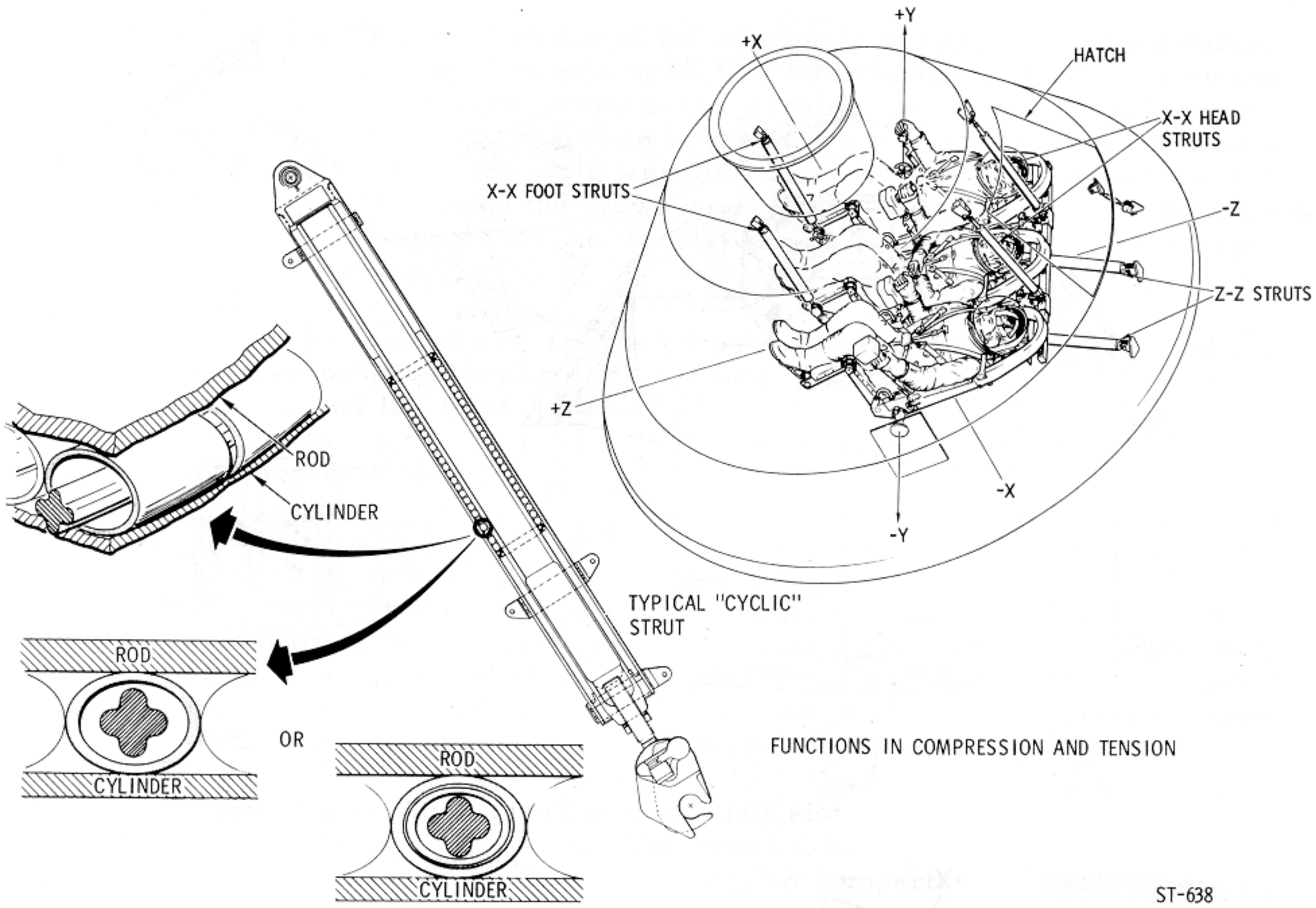

Figure 1-12. Internal Attenuation System

Two Z-Z axis struts are attached to the side stabilizer beams and the aft bulkhead of the structure, just below the side access hatch.

Four X-X axis struts are attached to the forward CM structure and the beam extremities of the couch. These struts, except for the addition of a lockout mechanism, are basically the same as the Z-Z axis struts. A lockout mechanism is provided on each X-X strut to prevent any strut attenuation prior to landing (during normal mission flight loads). After deployment of the main parachute, the "lockouts" are manually unlocked.

After deployment of the main chutes and prior to landing, the "lockouts" are manually unlocked.

1.3.2.5.2 Foldable Couch Structure (Figure 1-13).

The foldable couches are supported similarly to the unitized couch structure, but the individual couches differ. The back pan angle to the Y-Z plane (horizontal) has been increased to 4 degrees 30 minutes.

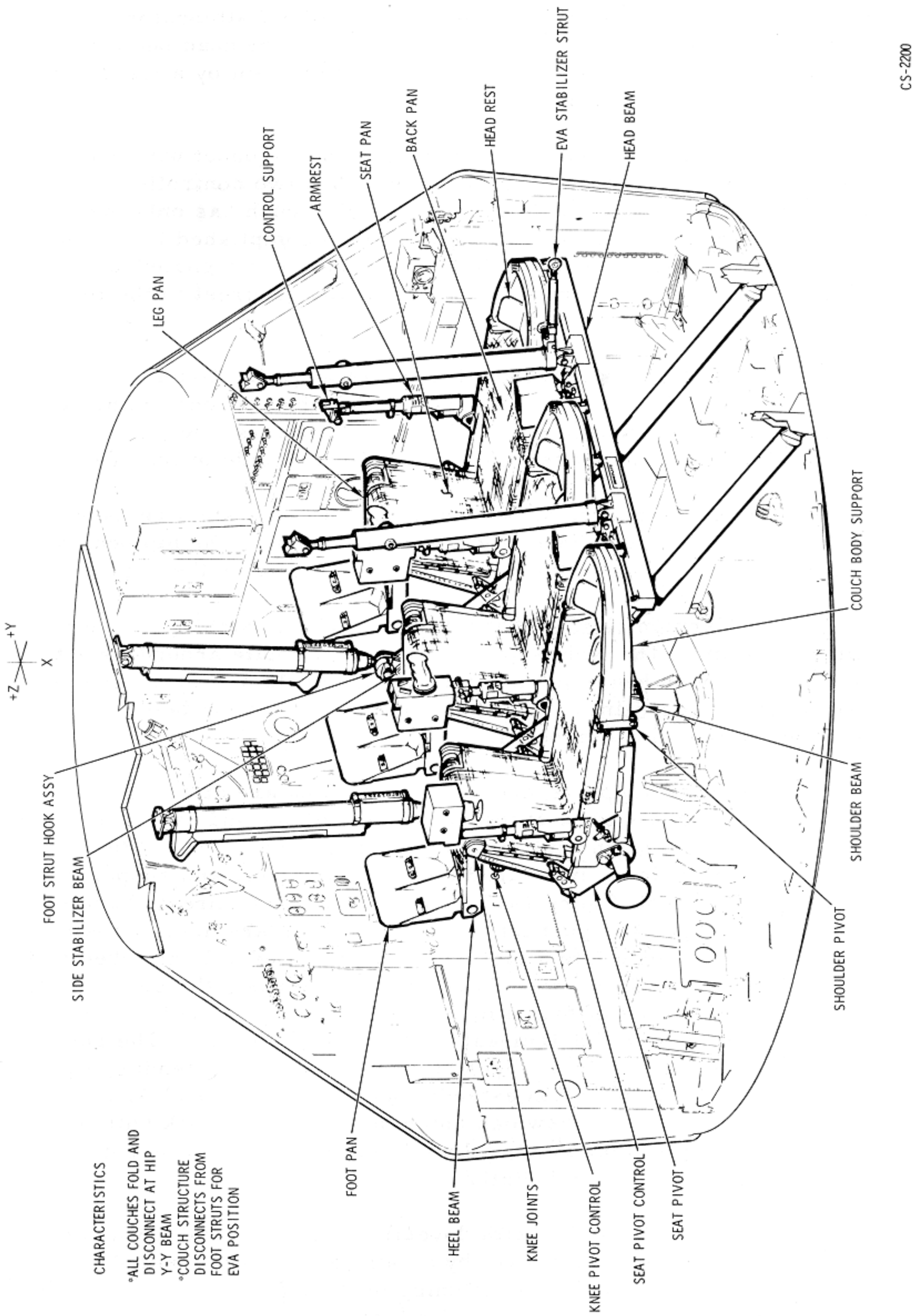

Figure 1-13. Apollo Foldable Crew Couch Structure

Description. The couch structure utilizes two strong side stabilizer beams for attachment of the foot XX and ZZ attenuator struts and a cross-member head beam for attachment of the head XX attenuator struts. The left, center, and right couches are attached to the head beam by a hinge/pip pin and are attached to the side stabilizer beam by a large Marmon-type clamp (figure 1-13).

Each couch consists of a headrest, body support with backpan, seat-pan, legpan, and footpan. The left couch has two controller supports/armrests, inboard and outboard. The right couch has only the inboard, or left, armrest. Support for the body is accomplished by a web or Armalon (multiple layers of fiberglass beta cloth, impregnated and covered with Teflon) over the support frame from the headrest to the footpan (figure 1-14).

The headrest is sheet steel with Teflon pad. To adjust it for crewman torso length, the headrest has 6-1/2 inches of longitudinal adjustment headward or footward in 1/4-inch increments. Adjustment is accomplished by the gearshift-type handle alongside of the headrest.

The body support, or backpan, consists of a steel rectangular-tube frame with a shoulder beam and a hip Y-Y beam. The hip beams of the outboard couches house the Y-Y attenuator struts on the outboard side.

The Marmon clamps that attach to the side stabilizer are part of the hip Y-Y beam. The body support frame will rotate around its attach point on the head beam and can fold at the shoulder beam. The shoulder straps of the restraint harness and one-half of the lap belts are solidly attached to the shoulder beam.

Controller supports/armrests rotate and are attached to the body support tubes in the area of the crewman's elbow and have various positions. The left couch outboard armrest has 65-, 90-, 120-, and 180-degree positions, measured from the backpan, and supports the translation control (figure 1-15). The other two armrests have 65-, 90-, 125-, and 180-degree positions. The armrests are held in position by a spring-loaded wedge into a slotted cam. The wedge is attached to a sleeve around the armrest. To rotate the armrest, the sleeve is lifted, the wedge pulled out of the cam, and the armrest rotated to the desired position. To extend the armrest, rotate the extension. The rotational and translation controls are locked on a dovetail by extending a pin; however, the controlling button extends into the center couch area. There is a danger of the center crewman bumping the control lock button and retracting the pin; therefore, a lock is on the shaft to prevent the button from being actuated accidentally.

The control support (with dovetail) pitches up and down, and is locked and unlocked at its pivot by a cam lever. The control support pivots to allow the correct positioning of the translation or rotation control during docking and the normal mission phases.

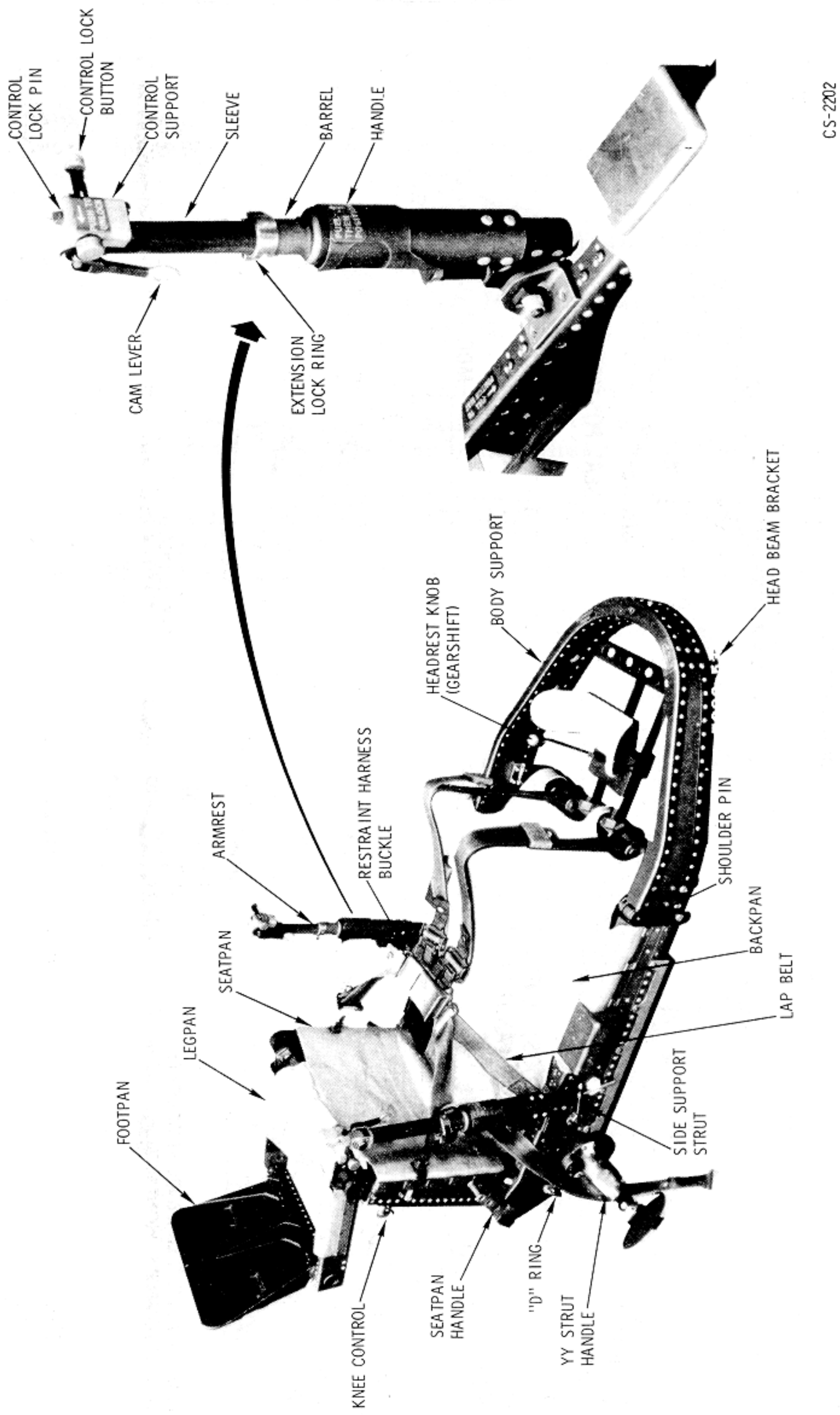

Figure 1-14. Foldable Couch Components

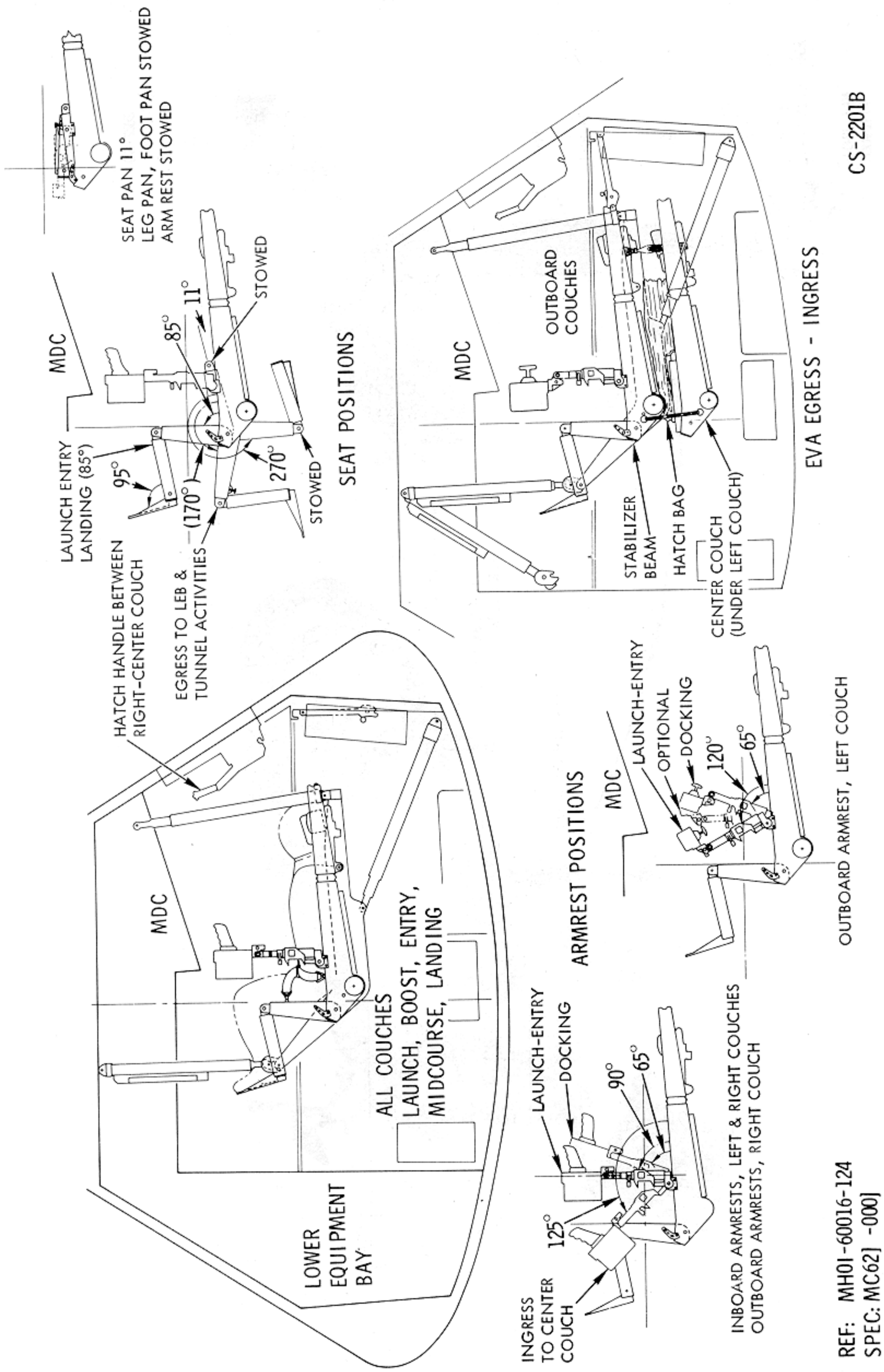

Figure 1-15. Foldable Couch Positions

The seatpan (seat) angles are 9, 85, 170, and 270 degrees. The 9-degree position is held by a detent, the 85- and 170-degree positions are lockable, and the seat travel is stopped at 270 degrees. The seatpan controls are located on the body supports at each side of the hips. The seat locked position is with the lever footward; the unlocked position is with the lever headward. One-half of the lap belt is attached to the seatpan frame.

The seatpan is connected to the legpan frame at the knee beam in a 78-degree angle. The knee control on each side of the couch locks and unlocks the seatpan to legpan angle. Unlocked, the seatpan-to-legpan angle will go to 15 degrees (folded), and to 180 degrees (flat).

The footpan has two positions, 95 degrees and folded (0 degrees). There are mechanical stops at each position. The footpan has two cleats and clamps which restrain the boots when properly engaged.

Seatpan, Legpan, Armrest, and Footpan Mission Positions. During the mission phases, there is a need to place the couch components into various positions. The following chart indicates the positions of the couch components during launch, boost, entry, and landing; egress-ingress to center couch to LEB and tunnel activities; EVA ingress or egress; and docking.

Mission Phases or Tasks (Figure 1-15)	Launch, Boost, Entry and Landing	Egress, Sleeping and Tunnel Activities	EVA Ingress or Egress	Docking
Seatpan angle	85°	170°	85°, 11° (cntr couch)	85°
Legpan angle	78°	78°	78°, 15° (cntr couch)	78°
Footpan angle	95°	95°	95°, 0° (cntr couch)	95°
Armrest angle outboard left couch	120°	120°	120°	65°
Armrest angle inboard left couch	90°	125° to 180°	125°	65°
Armrest angle inboard right couch	90°	125° to 180°	125°	65°
Control support pitch angle	0°	0°	0°	-25°
Foot X-X struts	Connected	Connected	Disconnected	Connected
EVA stabilizer strut	Stowed	Stowed	Connected	Stowed

Foldable Couch Adjustments. The couch has many adjustments that can be performed during the mission. The following chart gives a step by step procedure for making the adjustments, beginning with the headrest and progressing to the footrest. Because the couches are actuated in training during 1 g, the 1-g procedures are given also.

Task	Procedure	Results/Remarks
	NOTE • Directions are for person lying on couch. • Inboard/outboard movements - relative to couch.	
A. Headrest adjustment, headward - footward movement of 6.5 in. (figure 1-16)	1. Lift control knob (gearshift) toward head. 2. Hold gearshift knob in unlocked position and slide headrest to desired position. 3. Release gearshift knob.	1. Disengages lock. 2. Lock is spring-loaded to locked position. 3. Engages lock.
B. Armrest adjustments B1. Armrest rotation or pitching (Armrests lock in 65°, 90°, 120° (L) and 125° (R) positions) (figure 1-17)	1. Lift armrest handle. 2. Rotate (pitch) armrest to desired position. (Wedge will engage at next slot unless handle is lifted continually.)	1. Disengages wedge from slotted cam. 2. Wedge is spring-loaded to locked position. NOTE When rotating the outboard armrest of the left couch, caution should be exercised to prevent the [illegible]nal control cal[illegible]m hitting the stowed O_2 hose as damage may result to either object.
B2. Armrest extension (0-3.75 in.) (figure 1-17)	1. Rotate armrest extension lock ring away from couch. 2. Extend control to desired position. 3. Lock into position by rotating lock ring towards couch.	1. Full throw of about 160° will unlock sleeve. 2. Pulls sleeve out of barrel. 3. Cam will lock barrel to sleeve.

SPACECRAFT

Task	Procedure	Results/Remarks
B3. Control support pitching (Translation control pitch = 0°-55°) (Rotational control pitch = 0°-25°) (figure 1-17)	1. Move end of control support cam lever. 2. Holding control or handle, pitch it to desired angle. 3. Move end of cam lever down and outboard.	1. Unlocks control support. 3. Locks control support.
B4. Control attachment and locking, unlocking (figure 1-17)	1. Press control lock button down and swing lock hook away. 2. Press control lock button inboard. 3. Slide control onto support dovetail. 4. Press control lock button outboard. 5. Swing lock hook to button and hook on shaft (inboard armrests only).	1. Unlocks button so shaft can slide. 2. Retracts control lock pin. 3. Attaches control to support. 4. Extends control lock pin, locking control onto support. 5. Prevents control lock button from sliding to unlocked position.
C. Seatpan adjustment C1. Zero g seatpan adjustment, mid-mission application (Seatpan locks in 11°, 85°, 170°/stops at 270°.) (figure 1-16)	1. Place both seatpan handles in unlocked position (headward). 2. Move seatpan to desired position. 3. Place <u>one</u> handle in locked position (footward).	1. Disengages seatpan latches. Seatpan free to move. 3. One lock is sufficient in zero g.
C2. One g or greater seatpan adjustment, training, preflight, test, launch and entry application. (During one g, stand at LEB to adjust seatpan.) (figure 1-16)	1. Support seatpan (with hands or feet) and place <u>both</u> seatpan handles in unlocked position (headward). 2. Move seatpan to desired position, maintain support. 3. Place <u>both</u> seatpan handles in locked position (footward).	1. Damage may result to mechanisms if seatpan is allowed to drop to next position. 2. Same as 1. 3. In one g or greater, both latches may be locked to reduce strain on mechanisms.

Task	Procedure	Results/Remarks
D. Legpan to seatpan adjustment (15°, 78°) (During zero g, use one control. During one g or greater, use both controls and support legpan during movement.) (figure 1-18)	1. Pull knee control out and up to unlocked position. 2. Position legpan to desired position. 3. Pull knee control out and down to locked position.	1. Retract knee control pin from slotted cam. 3. Extends knee control pin, and locks.
E. Footpan adjustment (0°-95°) (figure 1-18)	1. Swing footpan to desired position.	1. Mechanical stops at 0° 95°.
E1. Engaging-disengaging foot restraints (figure 1-18)	1. Place both spacesuit boots or entry boots on footpan with heels together. 2. Move boots outboard while heels slide on footpan. 3. To disengage, move boots inboard while heels slide on footpan.	1. Pre positioning boots. 2. Footpan cleats will engage boot heels. 3. Cleats will disengage from boot heel.

Foldable Couch Mission Operations. During the mission, there are tasks into which the couches are integrated. The following table indicates some of those tasks and gives a step by step procedure. Figures are also referenced.

Task A, Preparing Couches for EVA, describes the folding of the L-shaped PGA stowage bag and the removing and stowing of the center couch in preparation for EVA. The removal and stowage of the center couch can also be performed when the center aisle needs to be cleared for intravehicular maneuvering purposes. In addition to clearing the center aisle for EVA, the whole couch structure (couches plus side beams and head beam) have to be stabilized when the foot X-X struts are disconnected. This operation is described in task B.

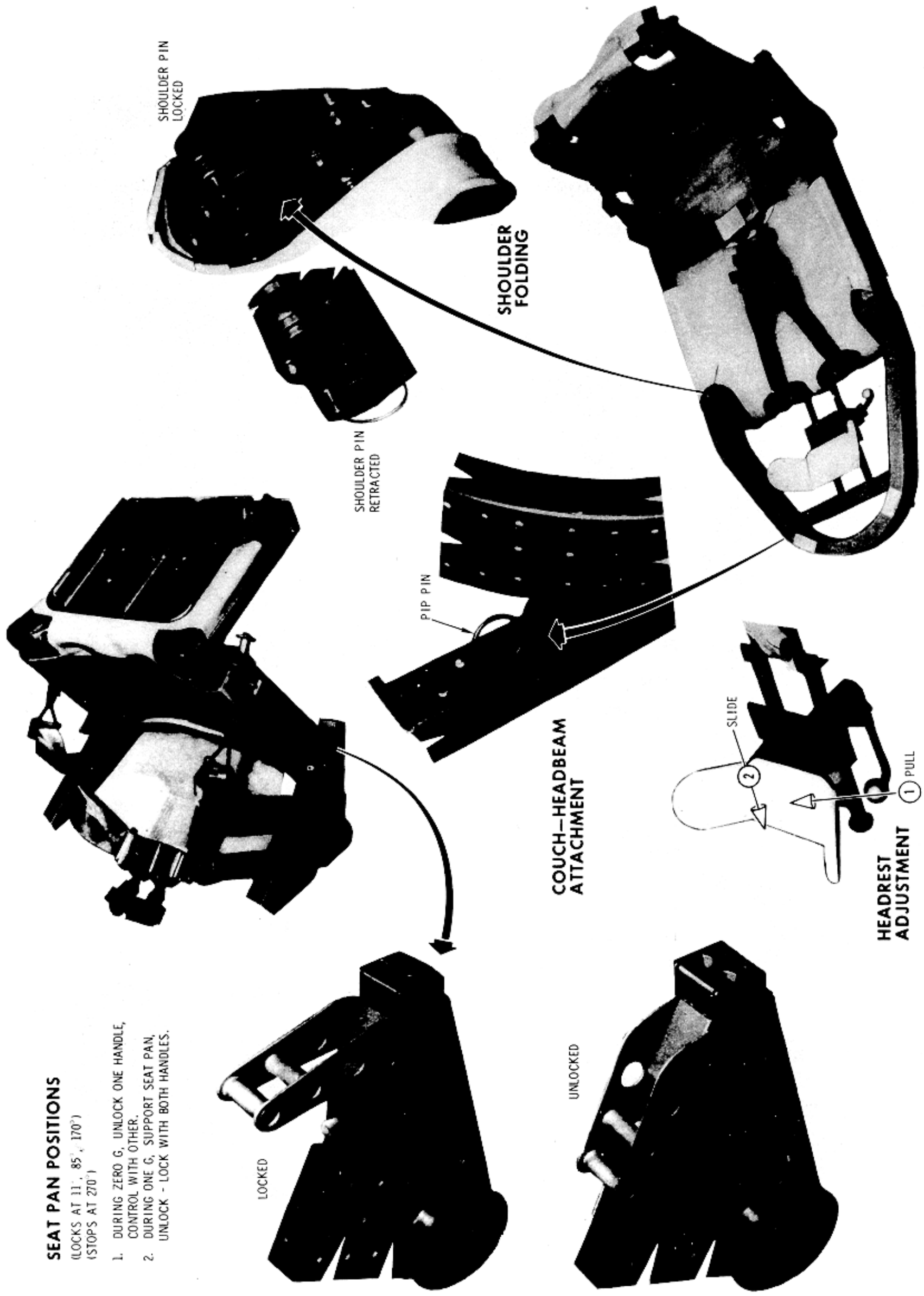

Figure 1-16. Couch Adjustments

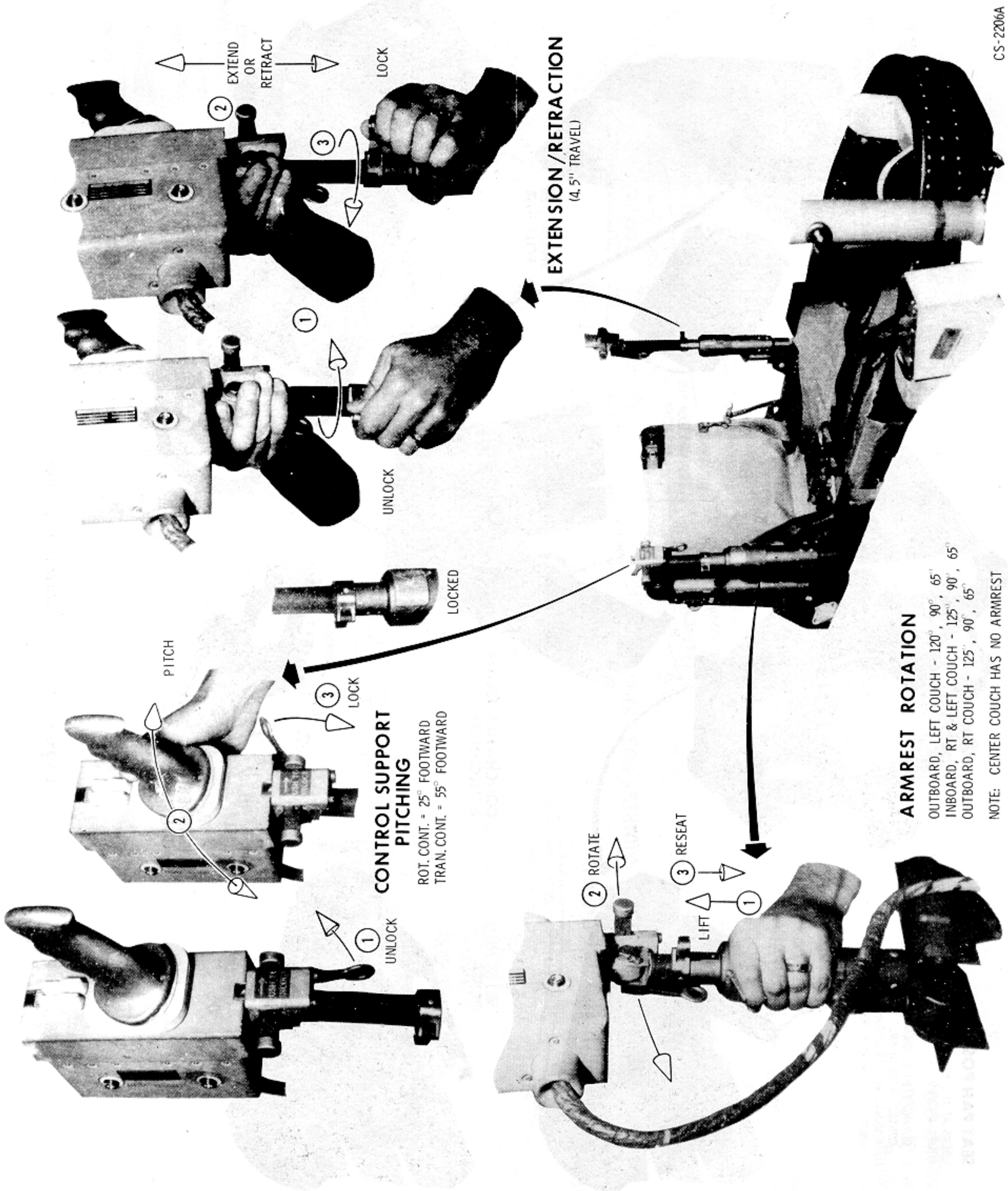

Figure 1-17. Armrest Positioning

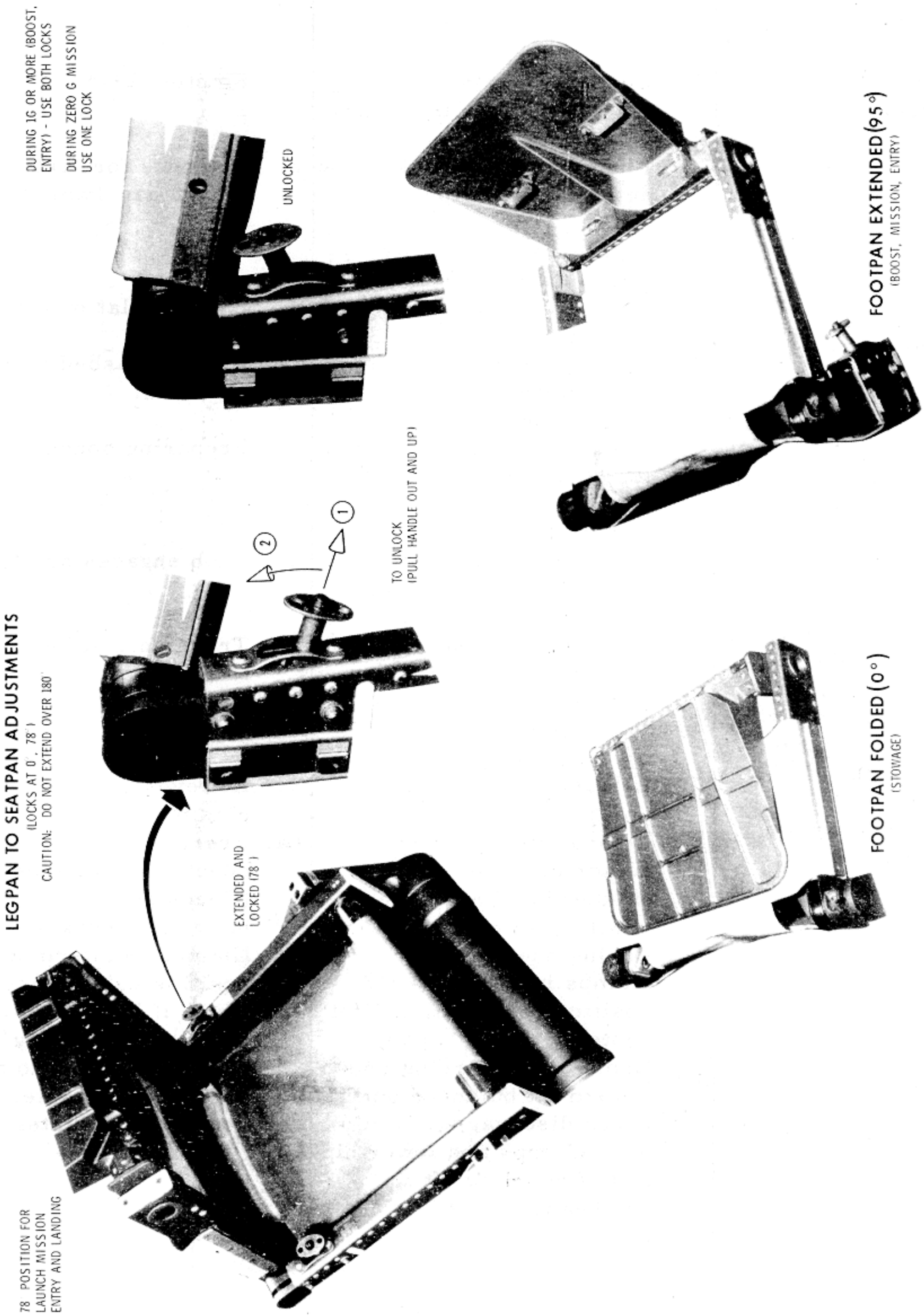

Figure 1-18. Legpan-Footpan Positions

SPACECRAFT

Task	Procedure	Results/Remarks
A. Preparing couches for EVA		
A1. Stow L PGA bag on aft bulkhead	1. Remove PGA helmet shield and stow in helmet bag.	1. Empties PGA bag.
	2. Unstrap bag hip straps and detach couch clips.	2. Detaches forward top of bag from couch.
	3. Fold lower half of bag flat, tucking sides.	
	4. Fold top half of bag flat, tucking sides.	4. Bag now flat on aft bulkhead.
	5. Attach bag top straps to aft bulkhead fittings.	5. Bag now lashed to aft bulkhead.
A2. Remove center couch to aft bulkhead (Crewman standing in LEB) (figure 1-19)	1. Fold footpan to 0°, lock legpan to 15°, and lock seatpan to 11°. (figure 1-20)	1. Preparing couch.
NOTE If the center couch is to be removed during one g conditions, the outboard (left and right) couches should <u>not</u> be occupied. Otherwise, extreme difficulty will be experienced during the removal.	2. Pull center couch hip clamp knobs down 2 in. (toward aft bulkhead).	2. Knob engages shaft.
	3. Using knob, unscrew shaft (CCW) until it is flush with trunnion.	3. Trunnion will be free to rotate.
	4. Swing knob towards LEB opening clamp.	
	5. Retract <u>one</u> Y-Y strut. (figure 1-21)	5. Relieves pressure on clamp plate.
	6a. During zero g, force center couch toward aft bulkhead and disengage couch from clamp plates.	6a. Frees footward end of couch from clamps. (Couch structure may have to be shaken.)
	6b. During one g, place clamps in intermediate position as a caution. Hold center couch backpan firmly while forcing couch toward aft bulkhead until couch disengages. Fully open clamps and lower hip end of couch to aft bulkhead.	6b. Clamps in intermediate position will support couch if it slips. Outboard couches may have to be lifted to take pressure off center couch clamp plates.

SPACECRAFT

Task	Procedure	Results/Remarks
	7. Move headrest footward. (figure 1-16)	7. Prep for strapping under left couch.
	8. Pull head beam pip pins (2). (figure 1-16)	8. Disconnects headward end of couch from head beam
	9. Lower couch to aft bulkhead on top of PGA bag.	9. Couch is now ready to stow.
A3. Stow center couch under left couch	1. Obtain lower (3.5 ft x 2 in.) and upper (4 ft x 2 in.) restrainer straps from stowage locker.	
	2. Thread lower strap hooks (2) through center couch hip holes from inside.	2. Preparing center couch to strap to left couch.
	3. Wrap upper strap around center couch headrest support bars and attach snap to ring.	
	4. Verify left couch headrest fully headward.	
	5. Position center couch under left couch, firmly pressing against tunnel hatch bag.	5. Head-to-head, hip-to-hip, and piggy back.
	6. Attach LOWER strap hooks to left couch D-rings.	6. Hip ends of couches now secured.
	7. Unsnap UPPER strap hook, resnap after wrapping around left couch headrest support bars.	7. Head ends of couches now secured.
B. Preparing couch structure for EVA. (figure 1-22)		
B1. Connect EVA stabilizer strut to couch.	1. Unstow EVA stabilizer strut by squeezing latch and pulling toward couch.	
	2. Connect EVA stabilizer strut to couch structure at aft end of right head strut. Engage stabilizer strut and press toward aft bulkhead.	2. With EVA stabilizer strut engaged, couch structure will be stabilized when foot struts are disconnected.

SPACECRAFT

Task	Procedure	Results/Remarks
B2. Disconnect foot attenuator struts and attach to forward equipment bays.	1. Grasp the quick-disconnect hook assembly, pull lock pin actuator toward lower equipment bay.	Holding lock pin actuator in disengages lock pin.
	2. Pull lower end of foot attenuator strut (quick-disconnect hook assembly) firmly toward LEB until it disengages.	
	3. Repeat for other foot X-X attenuator strut.	
	4. Swing attenuator struts along side of forward equipment bay, and strap.	Holds attenuator struts out of the way for increased mobility in LEB.

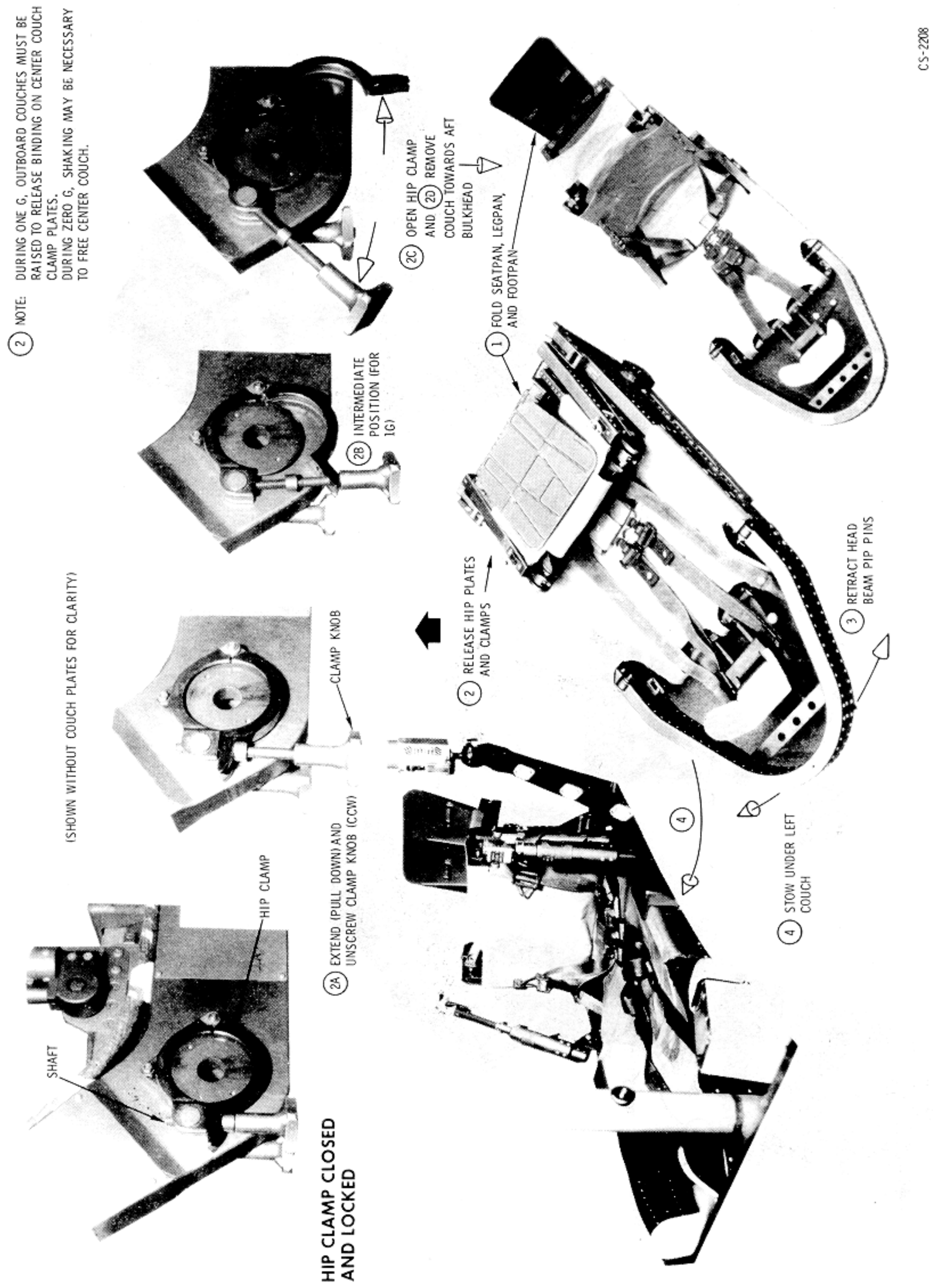

Figure 1-19. Stowing the Center Couch

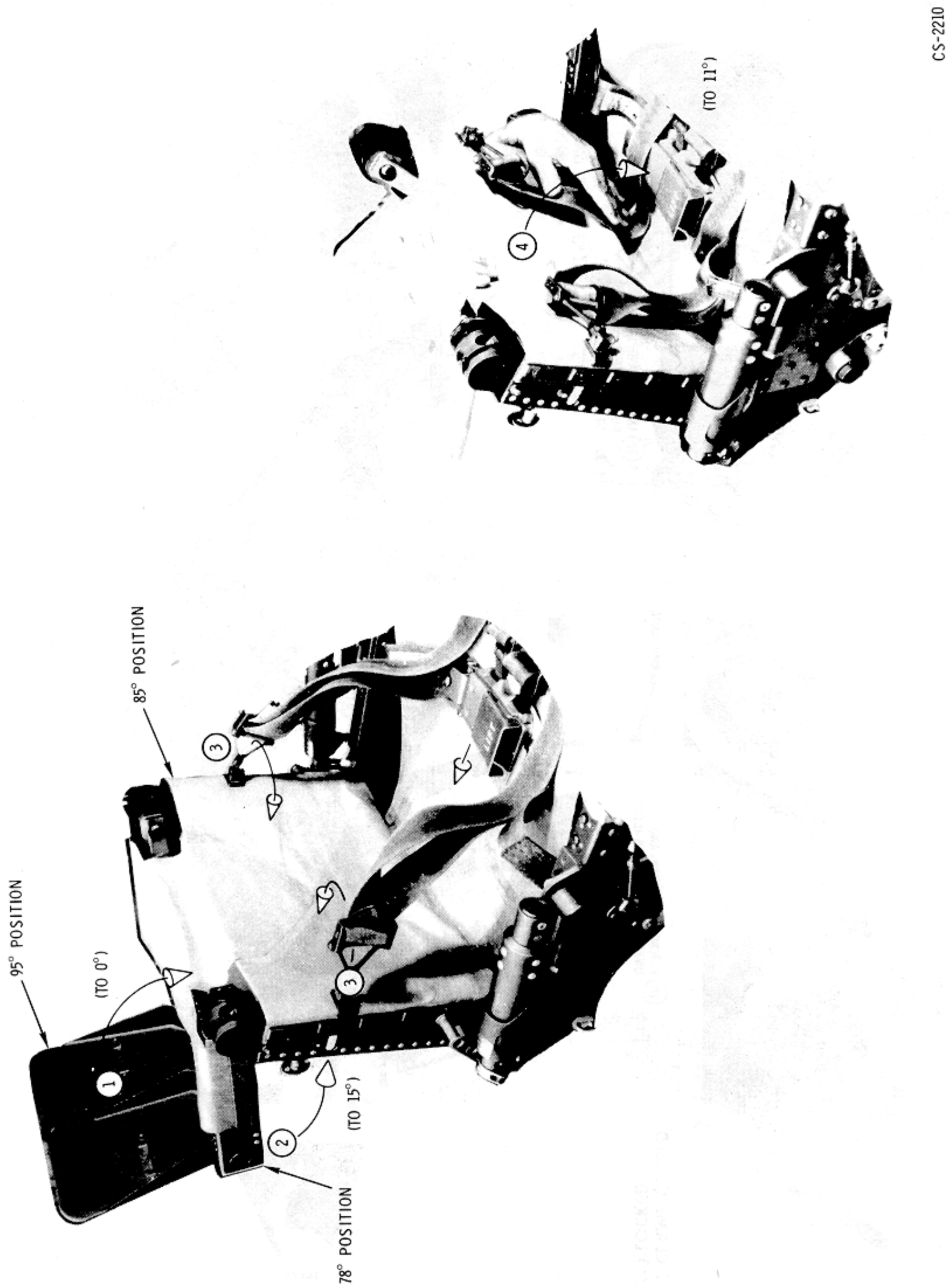

Figure 1-20. Folding the Seatpan

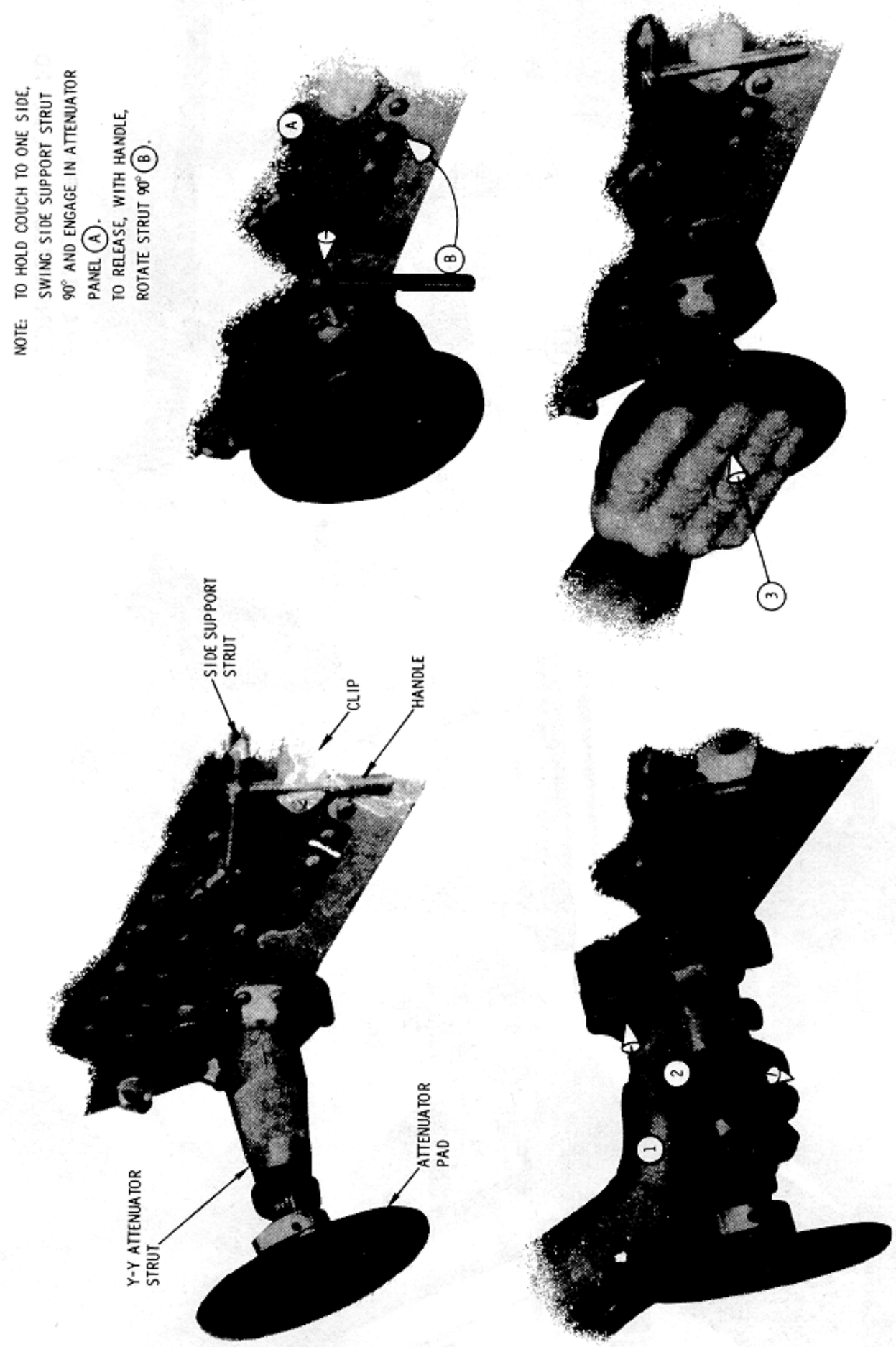

CS-2211

Figure 1-21. Y-Y Strut Retraction

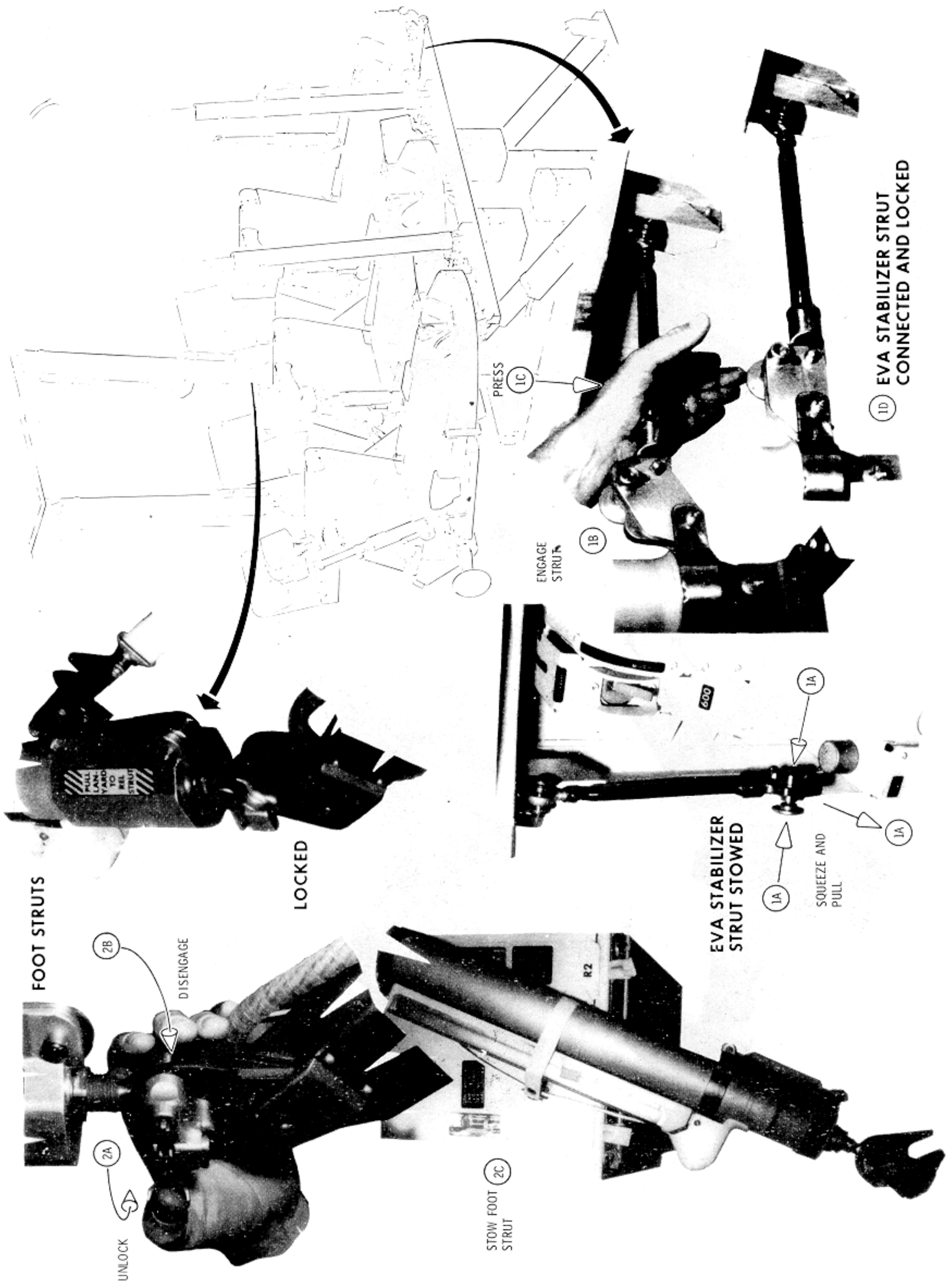

Figure 1-22. Preparing Couch Structure for EVA

1.3.2.6 CM Mechanical Controls.

Mechanical controls are provided in the crew compartment for manual operation of the side access hatch covers, forward access hatch covers, and manual override levers for the ECS cabin pressure relief valve. Tools for emergency opening or securing the hatches and operating ECS manual backup valves are in the toolset pouch in a locker on the aft bulkhead.

1.3.2.6.1 Side Access Hatch.

Side access to the crew compartment is through an outward-opening single-integrated hatch assembly and adapter frame (figure 1-23). The hatch provides for primary structure pressure loads and supports the hatch thermal protection system. It includes a primary flexible thermal seal, hinges, and a latch and linkage mechanism. Provisions for a scientific airlock, window, or closeout adapter, a pressure dump valve, and a GSE cabin purge port are also incorporated. A secondary thermal seal is attached to the heat shield ablator around the hatch opening and bears against the inner structure. The adapter frame, which closes out the area between the inner and outer structure, provides the structural continuity for transmitting primary structure loads around the hatch opening without transmitting the tension or compression loads to the hatch. The inner structure adapter frame contains a single primary pressure seal.

Hatch opening is accomplished by a manually driven mechanism which operates the latch and linkage mechanism. The latch and linkage mechanism provides a hatch lock for pressure loads and for pressure sealing of the crew compartment. (It does not provide shell continuity for hook tension or compression loads.) The door deployment mechanism is driven by a single handle with a ratchet mechanism. The internal lever operation is normal to the hatch with the inboard stroke driving the latches closed while the outboard stroke drives the latches open. The hatch will open 100 degrees minimum to provide clearance for the crewman past the scientific airlock when mounted on the hatch. A counterbalance system is provided to assist in opening the hatch in both normal and emergency conditions and attenuate the opening and closing velocity of the hatch (figure 1-24).

The hatch is normally latched and unlatched manually from the inside by an actuating handle permanently attached to the gear box (figure 1-23). Prior to handle actuation, the two control levers are positioned to the LATCH or UNLATCH positions as shown in view E and G. Both selectors are placed in identical positions when

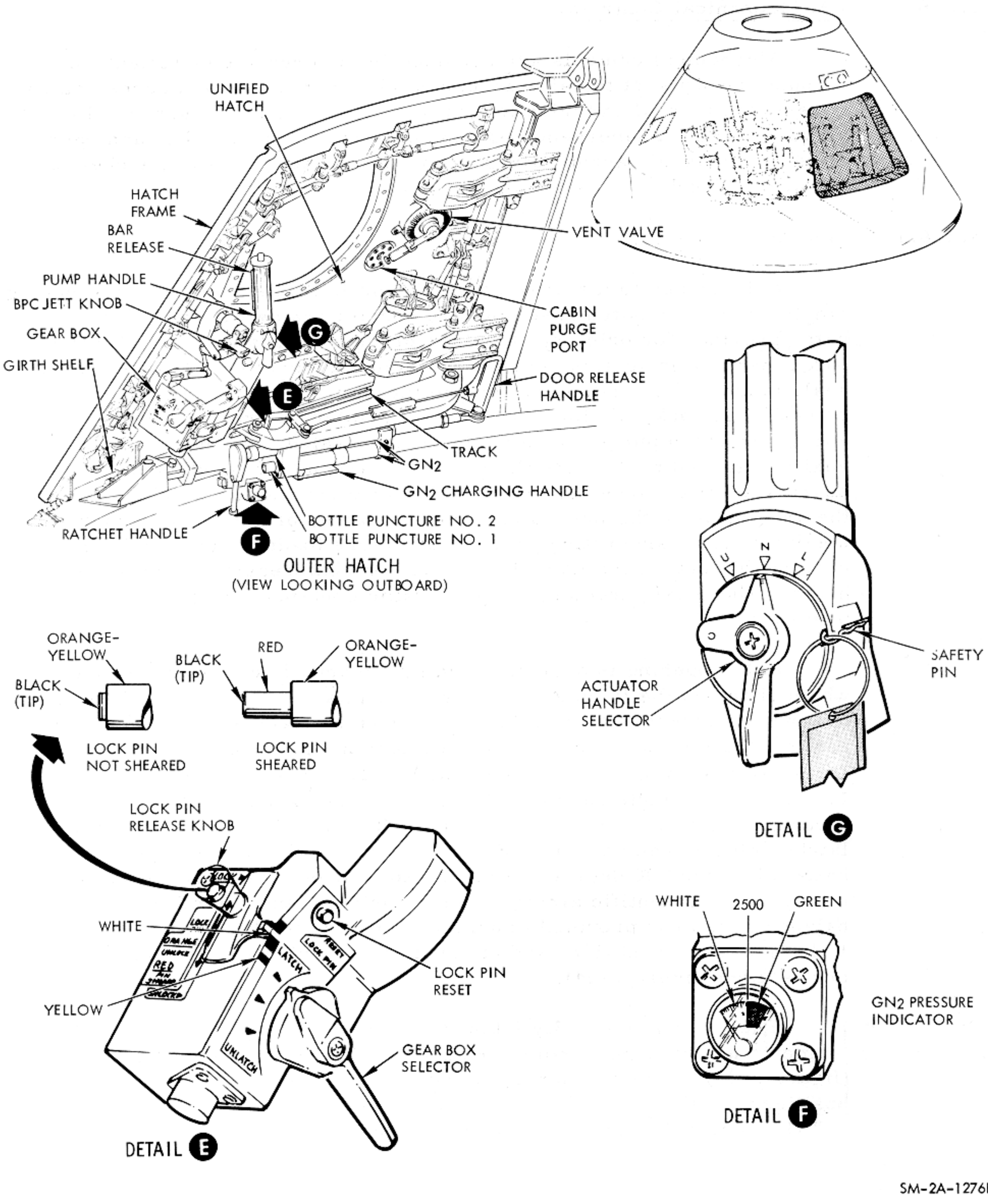

Figure 1-23. CM Side Access Hatch

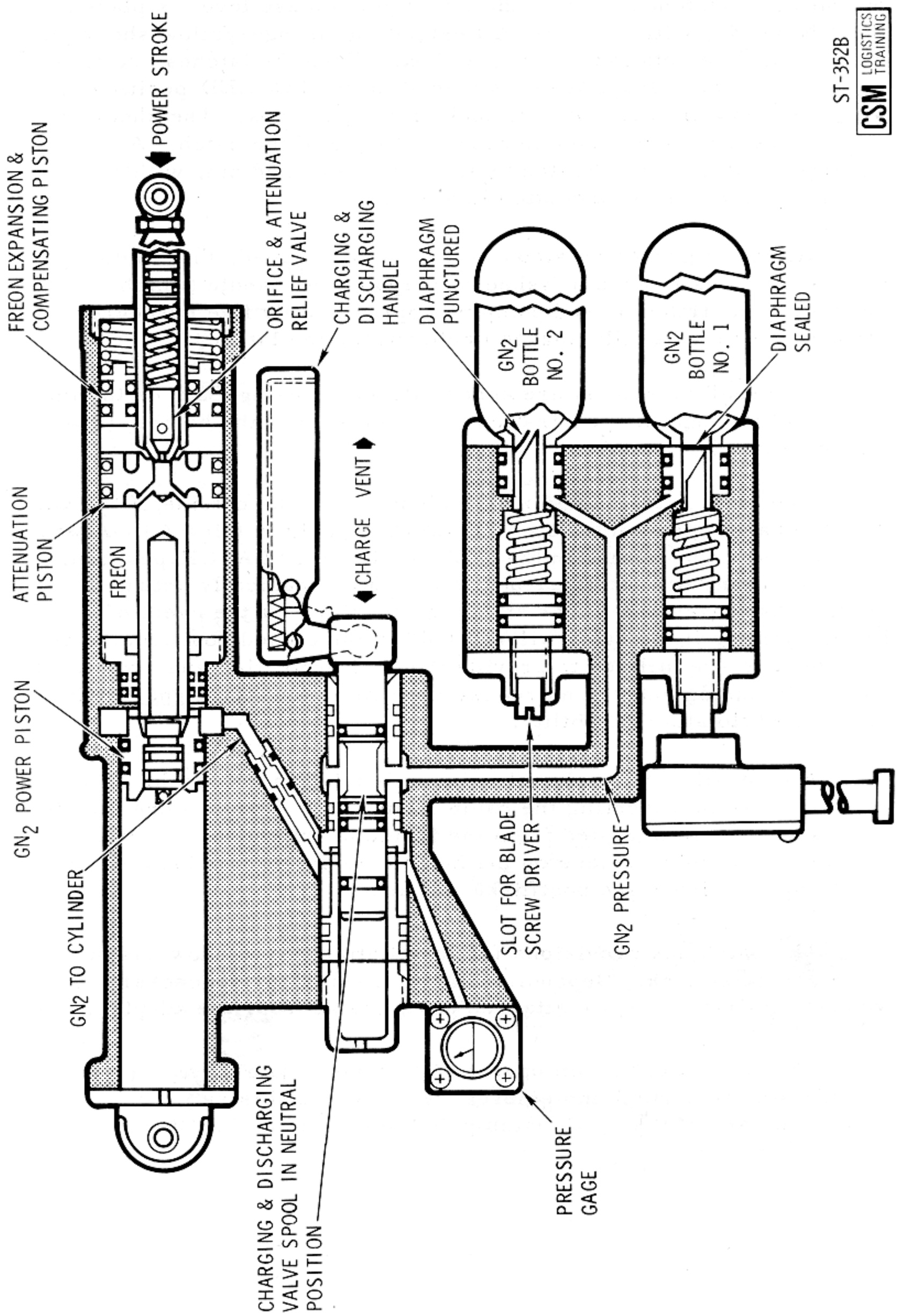

Figure 1-24. CM Hatch Counterbalance Schematic

operating the latches. Next, the shear pin release lever is placed in the UNLOCK position. This will extend the orange-yellow shear pin permitting free rotation of the gear box. When the latches are fully engaged, or the release lever is placed in the LOCKED position, the orange-yellow pin will retract, locking the gear box. The shear pin may be sheared during an emergency opening of the hatch. A sheared condition is indicated by the protruding red pin, within the orange-yellow pin, as indicated in view E.

After the preceding steps have been performed, the handle is unstowed. This is accomplished by gripping the handle (which depresses the trip bar) and pumping approximately five 60-degree strokes. This will fully engage or disengage the latches.

External operations are accomplished by using GSE or the in-flight tool through the penetration on the outside of the hatch. (See figure 1-24A.)

The crew hatch should not be closed from the outside of the CM with the handle control knob in the LATCH position (view G). Always set the pawl control knob in the NEUTRAL or UNLATCH position. Located around the outer periphery are 15 mechanically actuated latches that engage the inner structure adapter. In the event of a linkage jam or if the hatch will not hold in the closed position, auxiliary devices are utilized to provide thermal protection and structural continuity during entry, and render the CM in a water-tight condition for limited flotation capability.

A manually operated vent valve is located in the hatch. The valve is capable of venting the cabin from 5 to 0.1 psig in one minute. The valve may be operated from the inside or outside by a suited crewman. A tool interface on the hatch exterior is provided for pre-flight, space flight, and postflight operation.

The hatch has provisions for installation of a window assembly or scientific airlock. Depending on the mission, or spacecraft, the window or airlock may be attached using the appropriate adapter.

The hatch mechanism operates the boost protective cover (BPC) mechanism for normal and emergency modes, and is sequenced to ensure release of the BPC hatch prior to unlocking the CM hatch.

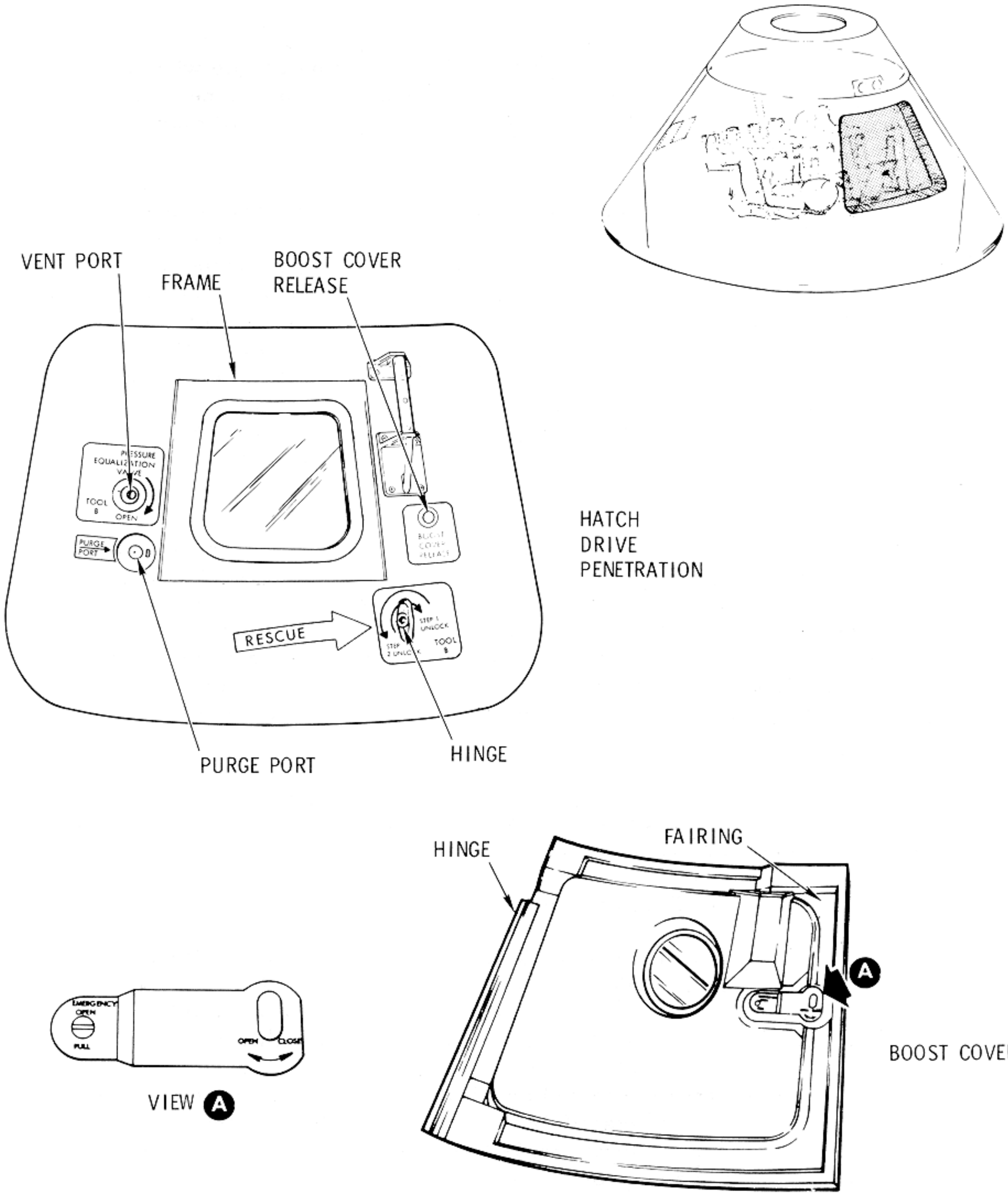

Figure 1-24A. Exterior Hatch Views

The BPC is hinged and retained with a tethering device when the combined unified and BPC hatch are opened. A permanent release handle (D-ring) is utilized on the outside of the BPC to manually unlatch the drive mechanism (figure 1-24A).

The counterbalance assembly is a stored energy device capable of opening the unlatched CM and BPC hatches in a one g environment. It is mounted adjacent to the CM hatch and connected to the hatch deployment mechanism. Figure 1-24 illustrates schematically the mechanization of the counterbalance assembly. To pressurize the system for normal pad operation, the number one bottle diaphragm is punctured utilizing a blade screwdriver. The charging and discharging handle is actuated and the gas bleeds into the cylinder. The high-pressure gas provides an opening force that will open the hatch when the latches are released. The cylinder must be vented after launch to adjust the system for zero g operation.

The counterbalance maintains an outward force on the hatch to balance the weight, overcome seal drag, and assist in opening the hatch when the latches are actuated. The ground crew can easily close the hatch by pushing it closed and recompressing the gas (nitrogen). In this manner the nitrogen is not vented. Additional nitrogen is introduced only if the cylinder pressure has decayed. A pressure indicator permits monitoring the system pressure.

The number two bottle may be punctured after landing by ratcheting the ratchet handle until the diaphragm is pierced. This bottle should not be punctured until ready to open the hatch.

1.3.2.6.2 Forward Access Hatch (Figure 1-25).

The spacecraft utilizes a combined tunnel (forward) hatch. This single hatch serves as a pressure and thermal hatch. The hatch latching mechanism consists of six separate jointed latches whose linkage is driven by a pump handle from within the crew compartment. The latch operation from the inside is a 60-degree compression stroke selected by rotating the handle to the latch or unlatch position. A sealed drive is provided through the hatch, making the mechanism operable from the outside. A pressure equalization valve is provided to equalize pressure in the tunnel and LM prior to hatch removal.

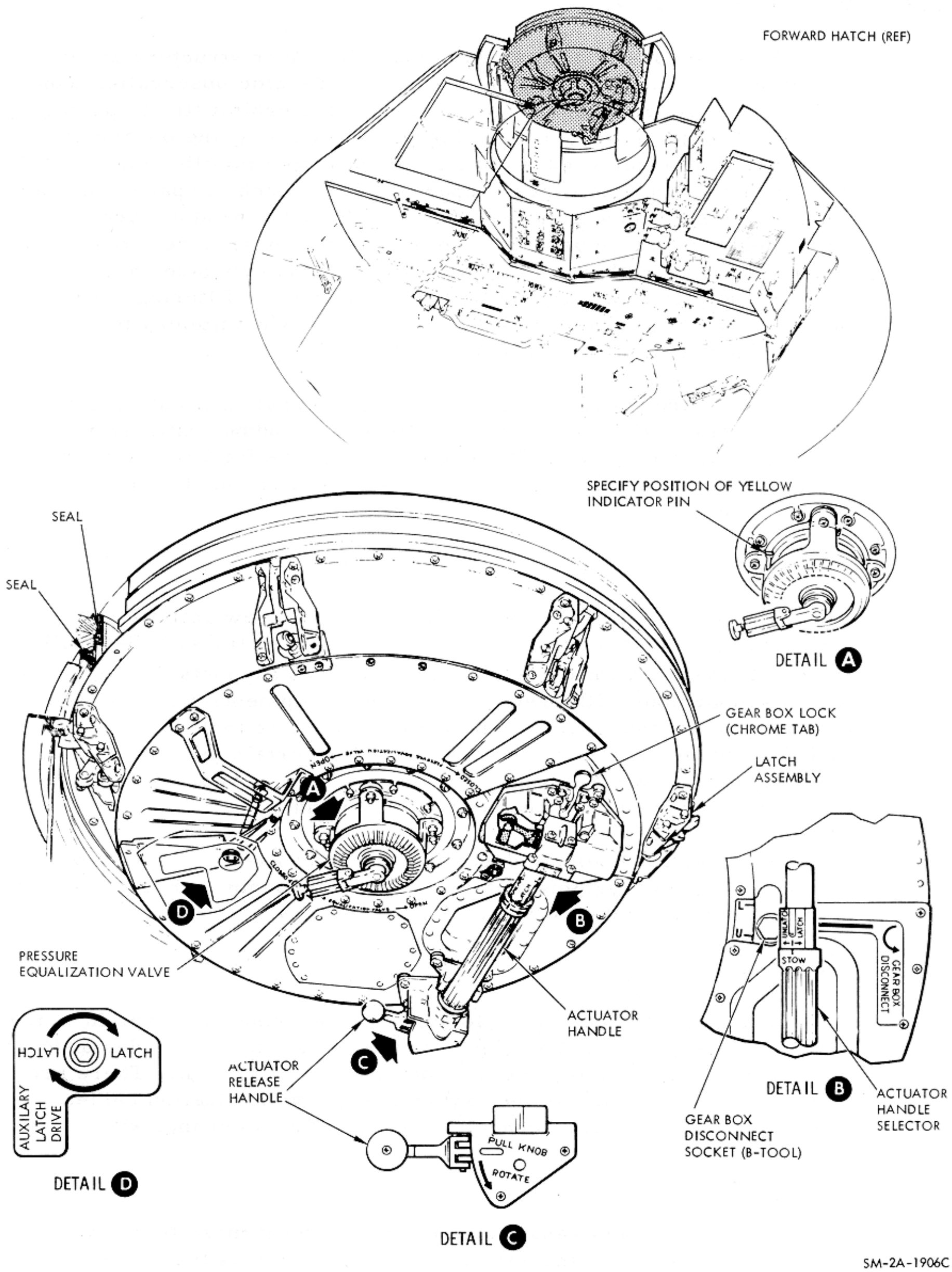

Figure 1-25. CM Forward Access Hatch

1.3.2.6.3 Windows and Shades.

Five windows are provided through the inner structure and heat shield of the CM: two forward viewing and two side observation windows and a hatch window. (See figure 1-5.) During orbital flight, photographs of external objects will be taken through the viewing and observation windows. The inner windows are made of tempered silica glass with 0.25-inch-thick double panes, separated by 0.1 inch of space, and have a softening temperature point of 2000°F. The outer windows are made of amorphous-fused silicon with a single 0.7-inch-thick pane. Each pane contains an anti-reflecting coating on the external surface, and has a blue-red reflective coating on the inner surface for filtering out most infrared and all ultraviolet rays. The glass has a softening temperature point of 2800°F, and a melting point of 3110°F.

Shades are provided for controlling external light entering the CM. These shades, individually designed for each window configuration, are made of aluminum sheet. The shades are opaque for zero-light transmittal, have a nonreflective inner surface, and are held in place by "wing" levers.

1.3.2.7 Crew Stations.

The place of crew activity, the objects of crew activities, and crew activity requirements are referred to as "crew stations." Generally, the term "crew stations" includes anything that supports the flight crew and is synonymous with crew systems and equipment; thus, the terms are generally interchangeable. A major distinction is that crew stations include controls and displays requirements, certain aspects of the environmental control system, and crew couches, whereas in crew systems and equipment they are not usually included.

This section does not describe crew activities but briefly relates the scope of crew systems and equipment by grouping. For a comprehensive description, refer to section 2.12.

1.3.2.7.1 Spacesuit.

The spacesuit acts as a flexible environmental chamber in which the crewman is supplied a flow of pressurized oxygen. It includes undergarments, ventilation ducts, and the communication system. There are many accessories such as the oxygen hose, communication cables, couplings, screen caps, connector plugs, and maintenance kits.

1.3.2.7.2 Restraints.

Crew restraints range from the restraint harness to restrain the crew in the couches to the zero g restraints, such as the sleep station

restraints, hand-holds, and EVA guards. Equipment restraints include a number of snaps and Velcro patches on the crew compartment structure and utility straps which clasp to the snaps.

1.3.2.7.3 Internal Sighting Aids.

Internal sighting aids are objects that assist the crew in controlling light or sighting. These include shades, mirrors, crewman optical alignment sight, lunar module active docking target, and window markings.

1.3.2.7.4 External Illumination Aids.

The external illumination aids are lights or objects on the exterior of the Apollo spacecraft. They include the docking spotlight, running lights, radio-luminescent discs, the EVA floodlight, and rendezvous beacon.

1.3.2.7.5 Mission Operational Aids.

Objects or devices that assist the crew in the mission and the operation of the spacecraft are operational aids. The aids are the flight-data file, tool set, cameras, and miscellaneous accessories.

1.3.2.7.6 Crew Life Support.

Items included are drinking and food reconstitution water devices, food, waste management, and personal hygiene. Waste management consists of equipment for collecting, disinfecting, and storing the feces, and expelling urine overboard.

1.3.2.7.7 Medical Equipment.

The medical requirements are filled by the bioinstrumentation harness that transmits the respiration and pulse of the crew to the communications system, and a medical kit that contains medication for contemplated contingencies.

1.3.2.7.8 Radiation Monitoring Equipment.

The crew wears passive and active dosimeters for recording dosages. For measuring the radiation present in the crew compartment, a radiation survey meter and a Van Allen Belt dosimeter are stowed.

1.3.2.7.9 Postlanding Recovery Aids.

Upon landing, the crew will deploy the dye marker for daytime signaling, or turn on the recovery beacon for night signaling, connect cloth ducts for air, deploy a grappling hook to snag a sea anchor line, and, if needed, use a seawater pump to acquire sea water for desalinization. In the event the crew would be forced to abandon the command module, the survival kit would be used for flotation and signaling.

UPPER EQUIPMENT BAY FORWARD (UEBF)

1. SCIENTIFIC/ELECT DISCONNECT PANEL 227
2. VAN ALLEN BELT DOSIMETER
3. MDC PANEL 16
4. MDC PANEL 15
5. FLOOD LIGHT FIXTURE
6. UNIFIED HATCH
7. ORDEAL

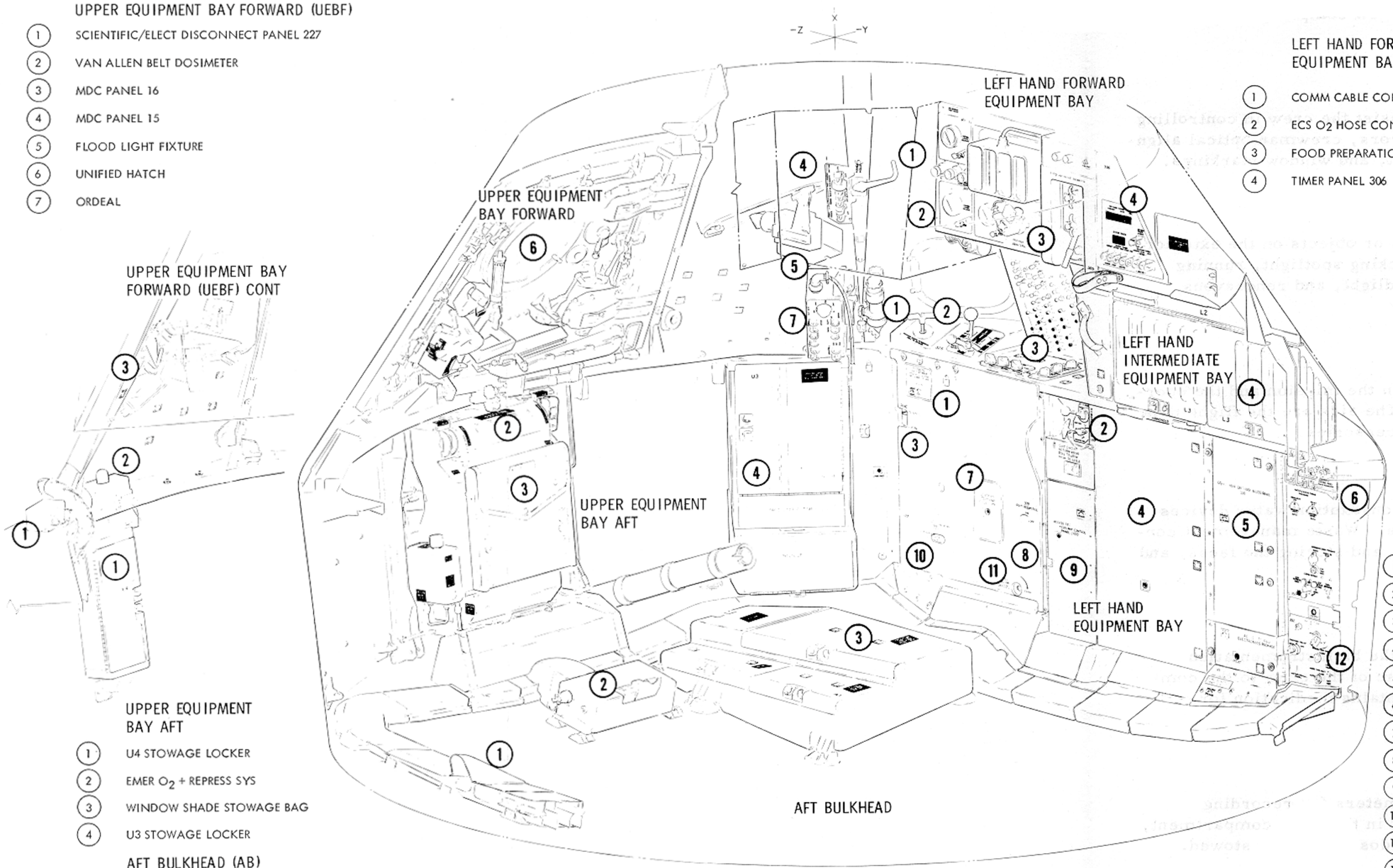

LEFT HAND FORWARD EQUIPMENT BAY (LHFEB)

1. COMM CABLE CONNECTORS
2. ECS O_2 HOSE CONNECTORS
3. FOOD PREPARATION WATER UNIT
4. TIMER PANEL 306

LEFT HAND INTERMEDIATE EQUIPMENT BAY (LHEB)

1. CREW OPTICAL ALIGNMENT SIGHT
2. CABIN PRESS RELIEF CONTROL PANEL 325
3. ECS O_2 & GLYCOL CONTROL PANEL 326
4. L3 STOWAGE COMPARTMENT

LEFT HAND EQUIPMENT BAY (LHEB)

1. O_2 SURGE TANK PRESS RELIEF
2. O_2 DEMAND REG VALVE PANEL 380
3. PLVC CONTROL PANEL 376
4. LEFT HAND ATTENUATOR PANELS
5. ECS FILTER ACCESS PANEL 350
6. OXYGEN CONTROL PANEL 351
7. SEAWATER PLUG ACCESS PANEL
8. W/G ACCUM FILL CONTROL PANEL 379
9. COOLANT CONTROL PANEL 382
10. GLYCOL TO RADIATOR CONTROL PANEL 377
11. W/G ACCUM ISOLATION CONTROL PANEL 378
12. WATER CONTROL PANEL 352

UPPER EQUIPMENT BAY AFT

1. U4 STOWAGE LOCKER
2. EMER O_2 + REPRESS SYS
3. WINDOW SHADE STOWAGE BAG
4. U3 STOWAGE LOCKER

AFT BULKHEAD (AB)

1. ELECTRICAL CABLEWAY
2. ROTATIONAL HAND CONTROLLER JUNCTION BOX
3. A1 STOWAGE LOCKER

VIEW LOOKING AFT & OUTBOARD
AFT BLKHD, UPPER & LH EQUIP BAYS

Figure 1-26. CM Internal Configuration (Sheet 1 of 2)

LOWER EQUIPMENT BAY (LEB)

1. AUXILIARY TEST PANEL 101
2. OPTICS STOWAGE COMPARTMENT
3. LIGHTING CONTROL PANEL 101
4. OPTICS PANEL 121
5. LEB DISPLAY KEYBOARD PANEL 140
6. G&N CONTROL PANEL 122
7. B1 STOWAGE COMPARTMENT (FOOD)
8. TRANSLATION CONTROL LEB MOUNT
9. ROTATIONAL CONTROL LEB MOUNT
10. B2 STOWAGE COMPARTMENT (MED KIT)
11. B3 STOWAGE COMPARTMENT (CAMERA EQUIP)
12. B4 STOWAGE COMPARTMENT (CHLORINE EQUIP)
13. B5 STOWAGE COMPARTMENT (CO_2 ABSORBERS)
14. B6 STOWAGE COMPARTMENT (CO_2 ABSORBERS)
15. B7 STOWAGE COMPARTMENT
16. ACCESS PANEL FOR VHF TRIPLEXER
17. B8 STOWAGE COMPARTMENT (CAMERA EQUIP)

AFT BULKHEAD (AB)

1. FIRE EXTINGUISHER
2. A3 STOWAGE LOCKER
3. A4 STOWAGE LOCKER
4. A5 STOWAGE LOCKER
5. A6 STOWAGE LOCKER
6. A7 STOWAGE LOCKER
7. ELECTRICAL CABLEWAY
8. A8 STOWAGE LOCKER

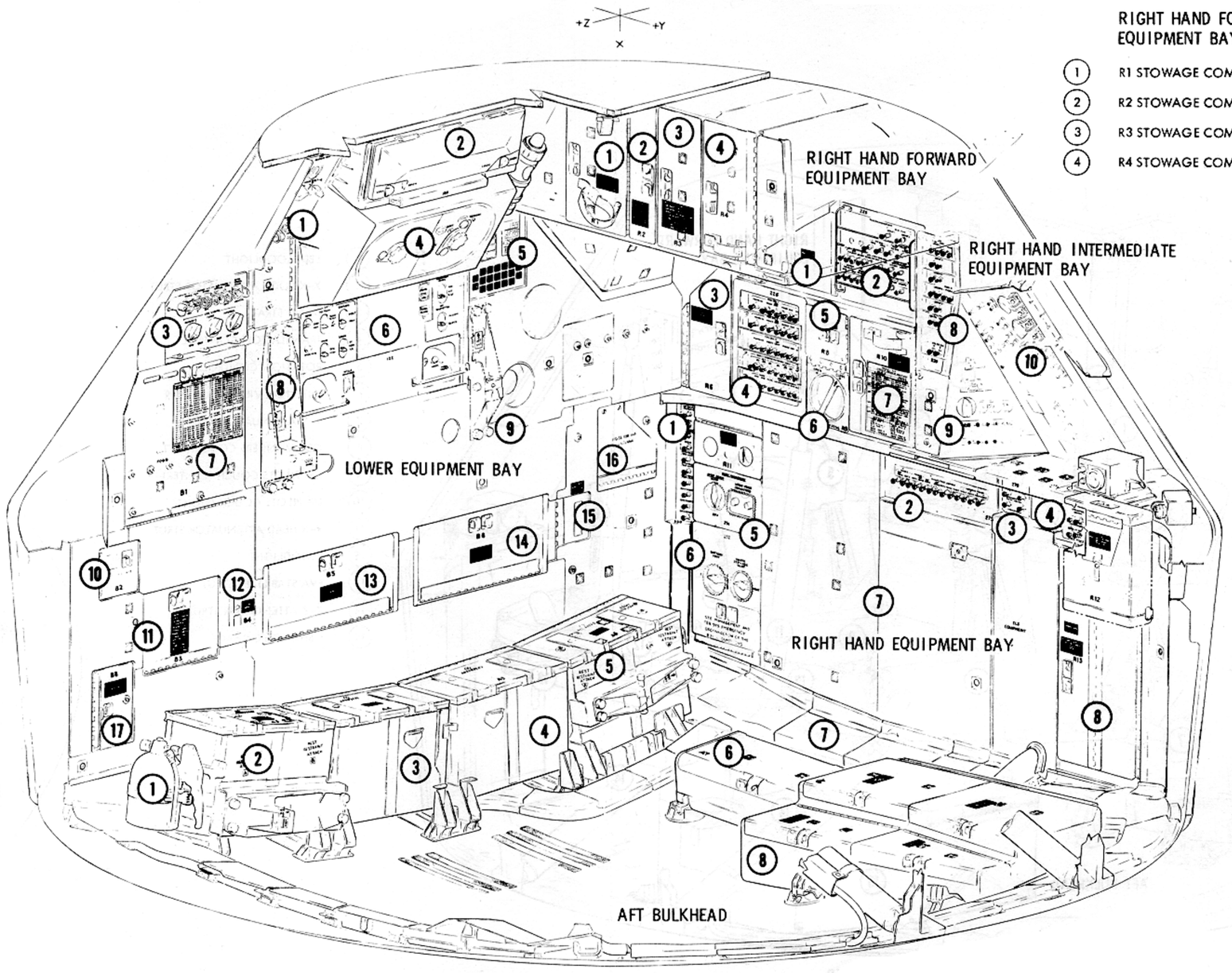

VIEW-LOOKING AFT & OUTBOARD
AFT BLKHD, L.E.B. & RH EQUIP BAY

RIGHT HAND FORWARD EQUIPMENT BAY (RHFEB)

1. R1 STOWAGE COMPARTMENT
2. R2 STOWAGE COMPARTMENT
3. R3 STOWAGE COMPARTMENT
4. R4 STOWAGE COMPARTMENT

RIGHT HAND INTERMEDIATE EQUIPMENT BAY (RHIEB)

1. R5 STOWAGE COMPARTMENT
2. AUX CIRCUIT BKR PANEL "A" 225
3. R6 STOWAGE COMPARTMENT
4. AUX CIRCUIT BKR PANEL "B" 226
5. R8 STOWAGE COMPARTMENT
6. R9 STOWAGE COMPARTMENT (WMS)
7. R10 STOWAGE COMPARTMENT
8. CIRCUIT BKR PANEL 229
9. MAIN DISPLAY CONSOLE 4
10. MAIN DISPLAY CONSOLE 5

RIGHT HAND EQUIPMENT BAY (RHEB)

1. BATTERY CIRCUIT BKR PANEL 250
2. POWER CIRCUIT BKR PANEL 275
3. POWER CIRCUIT BKR PANEL 276
4. UPRIGHTING SYS PANEL 278
5. WASTE MGMT SYS PANEL 251
6. BATTERY VENT PANEL 252
7. RIGHT ANTENNUATOR PANELS
8. R13 STOWAGE COMPARTMENT

SM-2A-2032

Figure 1-26. CM Internal Configuration (Sheet 2 of 2)

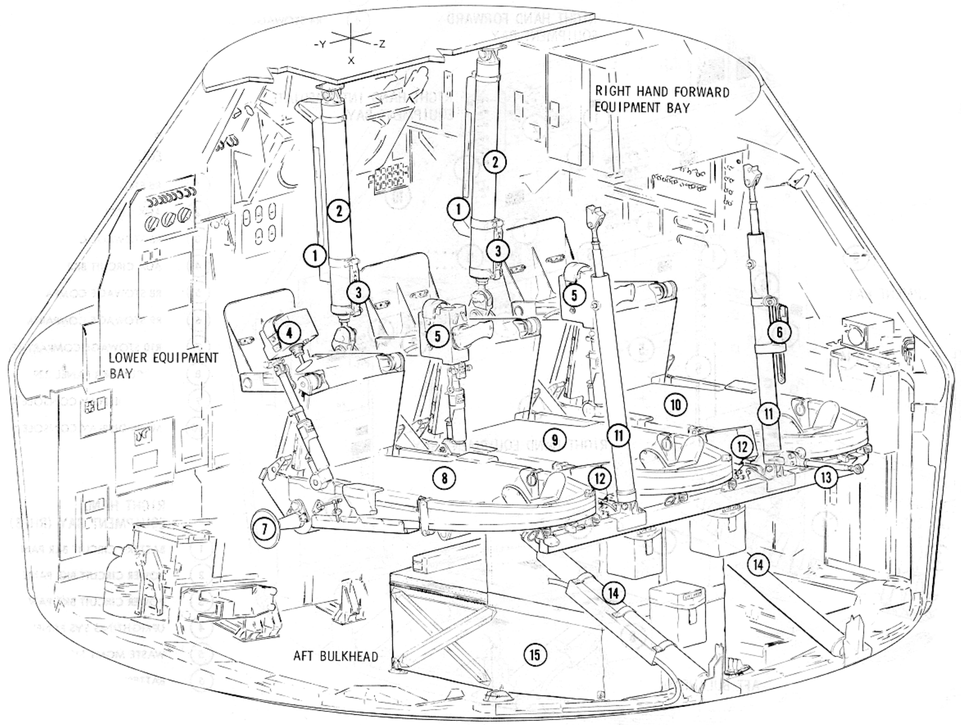

VIEW-LOOKING AFT & OUTB'D
FOLDABLE CREW COUCHES

1. LEB FLOODLIGHT
2. X-X FOOT ATTENUATOR STRUT
3. HAND STRAP
4. TRANSLATION CONTROL
5. ROTATION CONTROL
6. INTERNAL VIEWING MIRROR
7. Y-Y ATTENUATOR STRUT
8. COMMANDERS COUCH (LEFT)
9. CM PILOTS COUCH (CENTER)
10. LM PILOTS COUCH (RIGHT)
11. X-X HEAD ATTENUATOR STRUT
12. FLOODLIGHT
13. EVA STABILIZER STRUT
14. Z-Z ATTENUATOR STRUT
15. L SHAPED PGA BAGS

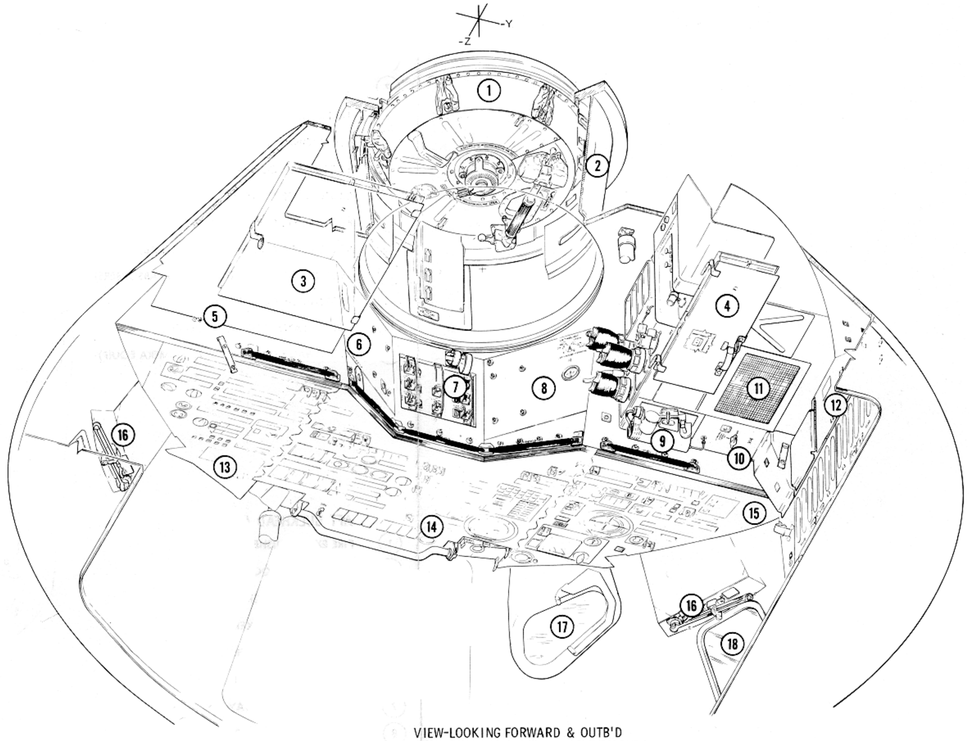

VIEW-LOOKING FORWARD & OUTB'D
COMBINED FWD PRESSURE HATCH, MDC CLOSEOUT &
LH FWD EQUIPMENT BAY

1. FWD PRESSURE HATCH (COMBINED)
2. TUNNEL
3. F1 TEMPORARY STOWAGE COMPARTMENT
4. F2 TEMPORARY STOWAGE COMPARTMENT
5. TV CAMERA RECEPTACLE
6. TV CAMERA MOUNT
7. AUDIO CONTROL PANEL 10
8. TUN/LM PRESSURIZATION PANEL 12
9. WATER METERING DEVICE
10. DRINKING WATER SUPPLY PANEL 304
11. ECS RECIRCULATION FAN INTAKE
12. L2 STOWAGE COMPARTMENT
13. MAIN DISPLAY CONSOLE 3
14. MAIN DISPLAY CONSOLE 2
15. MAIN DISPLAY CONSOLE 1
16. INTERNAL VIEWING MIRROR
17. LEFT FORWARD VIEWING WINDOW
18. LEFT SIDE VIEWING WINDOW

SM-2A-2033

Figure 1-27. CM Interior, MDC and Couches

1.3.2.7.10 Stowage and Internal Configuration.

In the crew compartment, numerous items of equipment are stowed in lockers or compartments designed to withstand the landing impact. The interior configuration of the crew compartment is shown in figures 1-26 and 1-27. The illustrations also show the equipment bays and spacecraft axes.

1.3.3 SERVICE MODULE (Figure 1-28)

The service module is a cylindrical structure formed by 1-inch-thick aluminum honeycomb panels. Radial beams, from milled aluminum alloy plates, separate the structure interior into six unequal sectors around a circular center section. Equipment contained within the service

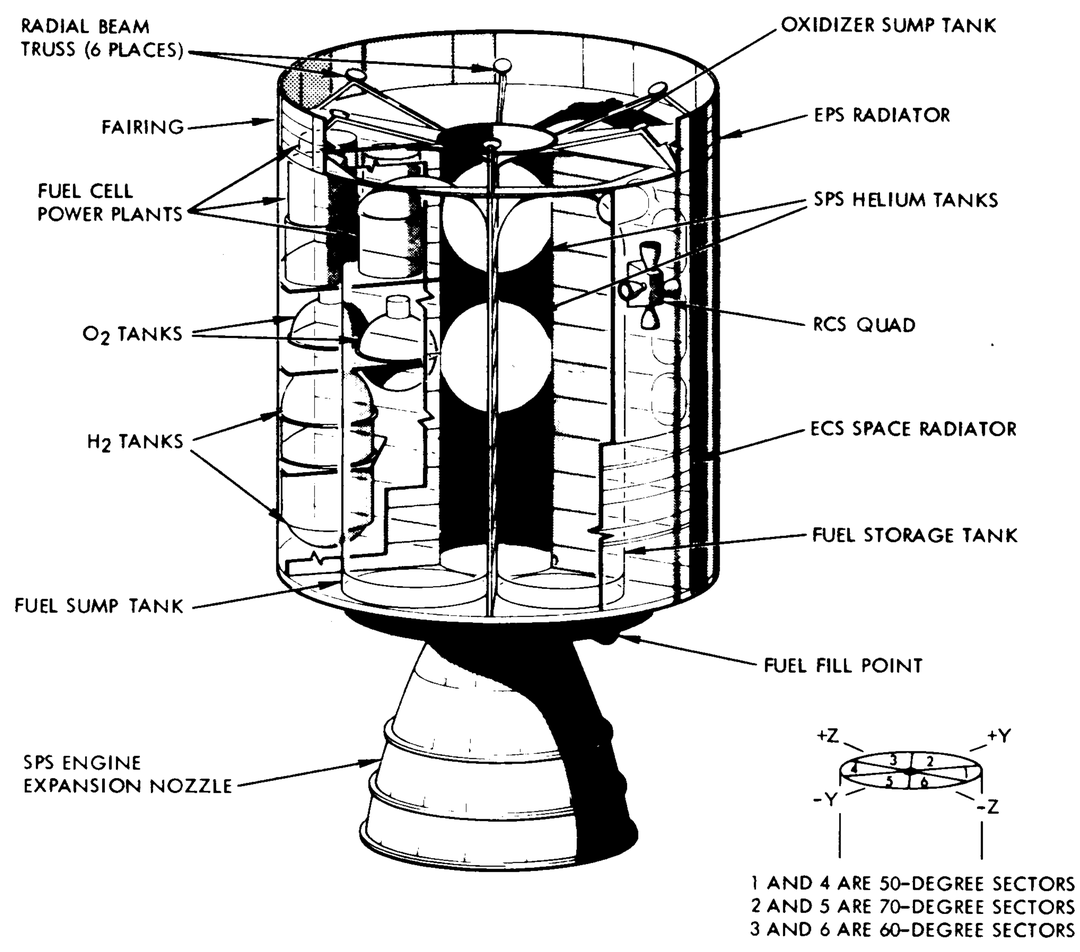

SERVICE MODULE ITEMS

Sector I
- Empty NASA equipment

Sector II
- Environmental system space radiator
- Service propulsion system
- Reaction control system package (+Y-axis)
- Service propulsion system oxidizer sump tank

Sector III
- Service propulsion system
- Reaction control system package (+Z-axis)
- Environmental system space radiator
- Service propulsion system oxidizer storage tank

Sector IV
- Fuel cell power plant (three)
- Helium servicing panel
- Super-critical oxygen tank (two)
- Super-critical hydrogen tank (two)
- Reaction control system control unit
- Electrical power system power control relay box
- Service module jettison controller sequencer (two)

Sector V
- Environmental control system space radiator
- Service propulsion system fuel sump tank
- Reaction control system package (-Y axis)

Sector VI
- Environmental control system space radiator
- Reaction control system package (-Z axis)
- Service propulsion system fuel storage tank

Center Section
- Service propulsion system helium tank (two)
- Service propulsion system engine

Fairing
- Electrical power system space radiator's (eight)

SM-2A-1278

Figure 1-28. Service Module

module is accessible through maintenance doors located around the exterior surface of the module. Specific items, such as propulsion systems (SPS and RCS) fuel cells, and most of the SC onboard consumables (and storage tanks) contained in the SM compartments, are listed in figure 1-28. The service module is 12 feet 11 inches long (high) and 12 feet 10 inches in diameter.

Radial beam trusses on the forward portion of the SM structure provide a means for securing the CM to the SM. Alternate beams, one, three, and five, have compression pads for supporting the CM. Beams two, four, and six, have shear-compression pads and tension ties. A flat center section in each tension tie incorporates redundant explosive charges for SM-CM separation. These beams and separation devices are enclosed within a fairing (26 inches high and 13 feet in diameter) between the CM and SM.

1.3.4 SPACECRAFT LM ADAPTER.

The spacecraft LM adapter (SLA) (figure 1-29) is a large truncated cone which connects the CSM and S-IVB on the launch vehicle. It houses the lunar module (LM), the nozzle of the service propulsion system, and the high-gain antenna in the stowed position. The adapter, constructed of eight 2-inch-thick aluminum panels is 154 inches in diameter at the forward end (CM interface) and 260 inches at the aft end. Separation of the CSM from the SLA is accomplished by means of explosive charges which disengage the four SLA forward panels from the aft portion. The individual panels are restrained to the aft SLA by hinges and accelerated in rotation by pyrotechnic-actuated thrusters. When reaching an angle of 45 degrees measured from the vehicles X-axis, spring thrusters (two per panel) jettison the panels. The panel jettison velocity and direction of travel is such as to minimize the possibility of recontact with the spacecraft or launch vehicle.

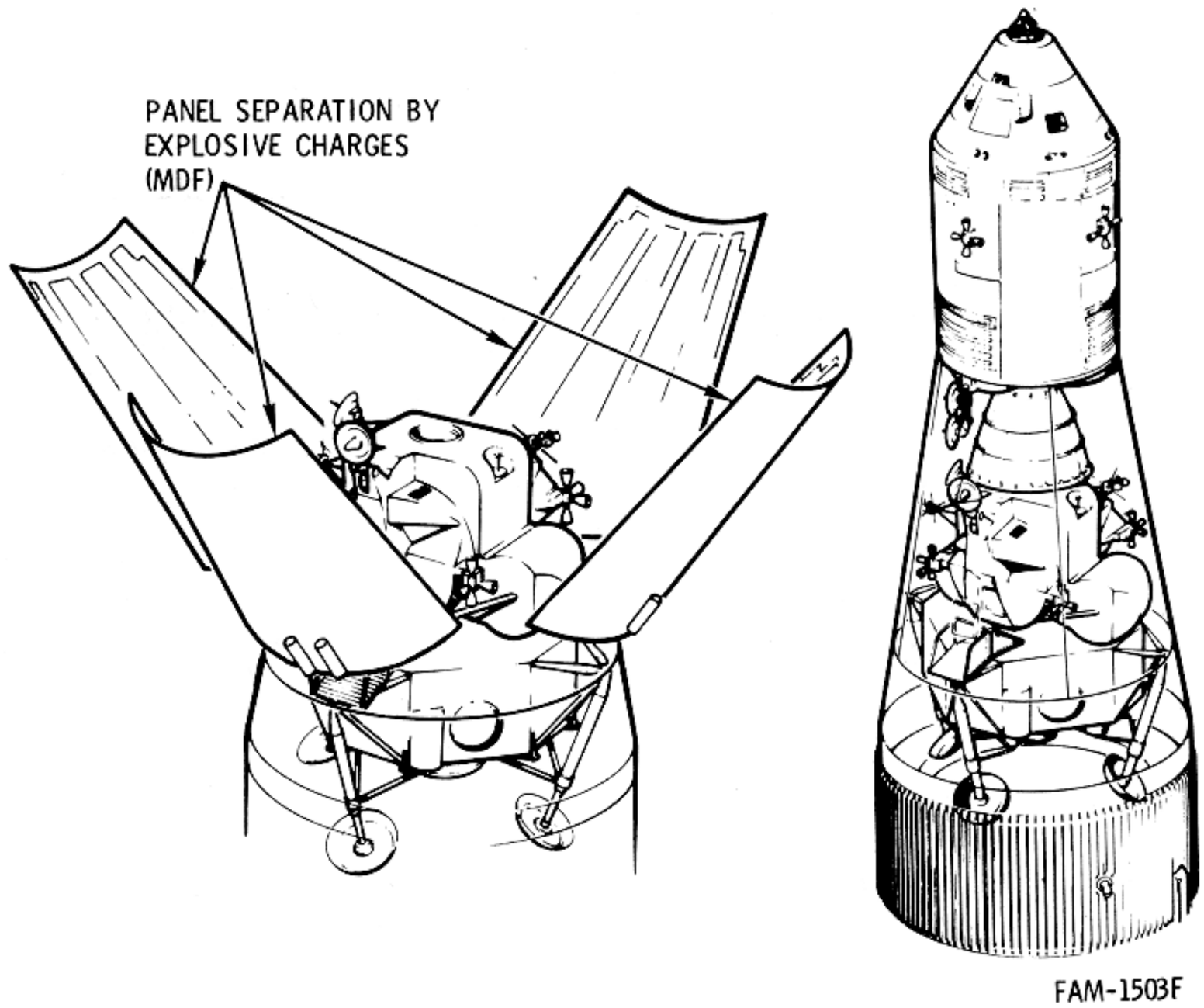

Figure 1-29. Spacecraft LM Adapter