ADVISORY PANEL ON THE SCIENTIFIC USE OF BALLOONS

MEETING -- 15 NOVEMBER 1965

TABLE OF CONTENTS

APPENDIX A. MINUTES
PREVIOUS MEETING

APPENDIX A.

NCAR PANEL ON SCIENTIFIC USE OF BALLOONS

MINUTES, 16-17 SEPTEMBER 1964.

NCAR Panel on Scientific Use of Balloons
Minutes
16-17 September 1964

The meeting was called to order at 1:00 p.m. on 16 September 1964 with the following members present: James Angell, Allen Hynek, Urner Liddell and Edward Ney. Present from NCAR were: Thomas Bilhorn, Robert Kubara, Vincent Lally, Alvin Morris, Daniel Rex, Walter Roberts, Stanley Ruttenberg, Samuel Solot and John Sparkman.

Mr. Morris indicated that Drs. Peter Meyer, John Strong and Verner Suomi were unable to attend. Dr. Suomi is assuming new duties at the Weather Bureau and was unable to get away; Dr. Strong is ill; Dr. Meyer was unable to resolve a prior commitment. Since a new Department of Defense representative has not yet been named, the DOD advisors were not invited.

Dr. Rex asked the Panel's reaction to the new schedule of the meeting--starting at noon on one day and ending at noon the following day. There was general agreement that the new schedule was excellent.

Chairman Ney then called the Panel's attention to Agenda Item 1 - Approval of Minutes of Meeting of 19 May 1964. The Panel deferred action on this matter until the members could study the minutes more carefully since none of them had been present at the last meeting.

Discussion of Agenda Item 2 - The Palestine Clam-Shelter Building - was initiated by Dr. Rex who commented that an inflation shelter has been on the Panel agenda and in NCAR's plans for the past two years. The Panel had made suggestions and taken note of progress in the past. We now believe that we have a practical and effective shelter plan and a realistic estimate of its cost. NCAR management has approved the plan for construction, but we wish to have Panel endorsement of the plan before seeking NSF approval.

Dr. Rex had written letters to Dr. Alvin Howell and Dr. Martin Schwarzschild requesting their individual opinions as to the advisability of constructing the shelter. Copies of their responses (attached as Appendix A) were distributed to the Panel members.

Dr. Roberts then pointed out that the inflation shelter had been deleted from the fiscal 1966 budget request with the understanding that NSF would receive a request for supplemental funds for construction of the shelter. He further stated that he felt that the NCAR staff had done a magnificent job of evaluating the capabilities and usefulness of the shelter. Although the staff and Dr. Roberts are completely convinced that the shelter will be a substantial asset to the ballooning program, Dr. Roberts felt the need of a firmer endorsement from the Panel that the inflation shelter should be a positive goal for NCAR before proceeding further.

Discussion of the inflation shelter plan included the following topics: flexibility of use with expected future and currently proposed types of launches; strength of the building and its ability to withstand anticipated wind loading with varying degrees of opening and in various orientations relative to the wind; increased safety of flight operations; increased density of flight operations; better performance of scientific equipment due to more deliberate and thorough ground check; and reasons for relocating the shelter from the previously proposed site.

> Action No. 1: It was moved and seconded that the Panel endorse NCAR's plans for the construction of the balloon inflation shelter as presented. Motion passed with Chairman Ney abstaining.

Further discussion of the inflation shelter indicated that some concern existed because the cost estimate was not a firm bid and because there was no price comparison between the clam shelter and other possible designs. It was pointed out that NCAR may have to wait two years to obtain funds to build a shelter and that no contractor would make a bid which would remain binding that long. Also, other design configurations had been considered and had been abandoned for reasons which included structural strength and utility. Detailed cost comparisons did not therefore seem warranted. NCAR felt that the cost estimate was as realistic as possible.

Agenda Item 3 - Proposal for Support of the Spectro-Stratoscope Balloon Program - was the next item of discussion. The Panel had requested at the last meeting that we obtain comments from outside of NCAR. Copies of the replies to Dr. Roberts' enquiry were distributed to the Panel (attached as Appendix B). Mr. Lally indicated that Mr. Sparkman has been tentatively assigned to the program as manager, that Kiepenheuer has decided to purchase an NCAR developed PCM system, and that Kiepenheuer has proposed to obtain support for balloons, helium, etc. from a US agency. Discussion emphasized that this was an international cooperative program of some importance and that the support required of NCAR is fundamentally operational in nature.

> Action No. 2: The Panel endorsed the scientific objectives of the proposal and recommended that NCAR support the program, with the understanding that costs to NCAR would be nominal support costs, not to include balloons, helium, or other directly assignable costs. It was so moved, seconded and carried unanimously.

Mr. Lally, referring to Agenda Item 4 - The IQSY Expedition in India, discussed the background of the IQSY program. He said that responsibility for the program has been assigned to the National Science Foundation and that NSF had suggested that NCAR manage the program. In line with NCAR policy that we avoid accepting and operating field projects other than at our fixed bases, it was decided that NCAR would contract with an industrial group to run the program and that NCAR would provide a program manager and a scientific coordinator.

Mr. Kubara reported that since there was no record of large polyethylene balloons having flown with reliability through the cold tropical tropopause, NCAR had carried out a test program in Panama. As a result of the test program, NCAR had selected Winzen balloons with the stipulation that the balloons be manufactured in Minneapolis with the right of 100% inspection by NCAR, and that manufacture by supervised by a Winzen employee of NCAR's choice. NCAR will take enough balloons to India to provide a 50% back-up for the flights planned.

Mr. Lally reported that Raven Industries had been selected to operate the field program and that two payloads are planned on most flights. The Indians will provide several observers and will fly some payloads of their own. A field trip to make diplomatic and logistic arrangements and to select sites is planned.

Action No. 3: It was moved and seconded that the Panel notes with interest the NCAR plans for the IQSY expedition to India, and it (the Panel) assumes the scientific value of the experiments has been evaluated by other means. Motion carried unanimously.

Mr. Lally then asked the Panel's opinion of NCAR's assumption of this type of program. It was pointed out that previous Panel advice to NCAR was to learn the art and not be simply a contracting agency. In this case we are trying to employ our managerial and technical abilities to best advantage while still giving industry the opportunity to participate and so retain its capability. The Panel informally endorsed Dr. Ney's statement that the approach to the program and its handling are impressive.

Session adjourned until the following morning.

The meeting was called to order again at 9:00 a.m. on 17 September 1964 with discussion of Agenda Item 5 - Annual Report. Discussion was concerned with means to make the annual report more useful. General comments were that cost and budget information should be added to the flight summaries; that a summary sheet for all flights be included to assist in referring to one particular flight; that, if possible, a comment be included as to the scientific results obtained; and that the accuracy of information regarding free lift and ascent rate be carefully checked. There were also several general suggestions concerning development programs, specifically materials research, high altitude balloons, and shape configuration analysis using the computer.

Action No. 4: It was moved and seconded that the Panel recommends in developing future plans that NCAR consider computer calculations of shapes involving configurations with circumferential tension. Motion carried unanimously.

Action No. 5: The Panel took note of and discussed the 1963 Annual Report, recommending that in the future each scientific project be described more fully and suggesting that a concise flight summary be provided in which page numbers of the detailed individual summaries are given.

Mr. Lally then distributed a statement concerning actions taken by NCAR on recommendations made by the Panel at earlier meetings (attached as Appendix C).

The Panel then observed that there will be a notable eclipse during 1966 and discussed the possibility for use of balloons, including tethered balloons, for an expedition during the eclipse.

Action No. 6: It was moved and seconded that NCAR make informal enquiry as to progress of the tethered balloon project at NOTS with a possible view toward future cooperation. Motion carried unanimously.

Action No. 7: It was moved and seconded that NCAR take note that a very auspicious total solar eclipse will occur in May 1966 in South America and the South Atlantic which will offer possibilities for good eclipse observations by balloon-borne instruments. Motion carried unanimously.

Following the discussion of NCAR actions on previous Panel recommendations, the Panel returned to Agenda Item 1.

Action No. 8: It was regularly moved and seconded that the minutes of the previous meeting be accepted as read. Motion passed unanimously.

The meeting was then adjourned without setting a time for another meeting.

End of Minutes

APPENDIX B. ANNUAL REPORT - 1964

APPENDIX B.

ANNUAL REPORT -- NCAR SCIENTIFIC BALLOON FACILITY.

(Bound Separately)

APPENDIX C. INSTITUT D'ASTROPHYSIQUE

APPENDIX C.

INSTITUT D'ASTROPHYSIQUE REQUEST FOR BALLOONING SERVICES.

Appendices, continued.

B. Annual Report -- NCAR Scientific Balloon Facility.

C. Institute D'Astrophysique Request for Ballooning Services.

D. University of California Request for Ballooning Services.

E. University of Rochester Suggestion for an Equatorial Expedition.

- END -

80301

5 August 1965

Dr. L. Delbouille
Universite de Liege
Institut d'Astrophysique
Cointe-Sclessin
BELGIUM

Dear Dr. Delbouille:

Many thanks for your letter of July 29th, which has been received while Dr. Roberts is away from the office. He will be happy to see it, together with the one from Dr. Migeotte, when he returns toward the end of the month.

Meanwhile, I have sent your letter and enclosures on to Dr. Daniel F. Rex, who is Associate Director of NCAR and Director of the Facilities Division. The decision as to the scheduling of your experiment will be in hands, so I'm sure you will be hearing from Dr. Rex or one of his colleagues directly.

With best wishes.

Sincerely,

Stanley Ruttenberg
Assistant to Dr. Roberts

cc: D. F. Rex
SR/es

[illegible]

UNIVERSITÉ DE LIÈGE

INSTITUT D'ASTROPHYSIQUE

COINTE-SCLESSIN (BELGIQUE)

AUG 3 1965

29 July 1965.

Dr. W.O. ROBERTS
Director - National Center
for Atmospheric Research
BOULDER (Colorado)
U.S.A.

Dear Dr. Roberts,

Now back in Belgium, we have, Dr. Roland and myself, to thank again you and your collaborators (in particular Mr. A.L. Morris) for your excellent reception, the help and all the advices which have been given to us during our last visit.

We have also visited the balloon facilities in Holloman Air Force Base, and our opinion is now clear. The telemetry and ground command possibilities offered by the NCAR do fit much better our experiment, so we have no more any reason to hesitate. You will find, here enclosed, a "more official" letter signed by Prof. Migeotte, and applying formally for NCAR collaboration to fly our gondola.

Confident that our project will be considered with attention, we thank you again, and repeat that we will be pleased to receive you at the Jungfraujoch.

Very sincerely yours,

L. Delbouille

L. DELBOUILLE

LD/jd.

UNIVERSITÉ DE LIÈGE

INSTITUT D'ASTROPHYSIQUE

COINTE-SCLESSIN (BELGIQUE)

30 July 1965.

Dr. W.O. ROBERTS
Director - National Center
for Atmospheric Research
BOULDER, Colorado
U.S.A.

Dear Dr. Roberts:

Drs. Delbouille and Roland told me how instructive has been their visit to NCAR, and how good are the facilities of the Palestine base.

As you already know, we are preparing now, with the support of the belgian government, a balloon-borne experiment to study the solar spectrum, at high resolution, in the 1.2 to 3 microns region.

You will find, here enclosed, a brief report about these plans. May I officially apply to receive the assistance of NCAR to fly our gondola, at your best conditions ? We actually hope to be ready for a first flight at the end of the autumn 1966.

NCAR telemetry and ground command facilities will fulfill perfectly our requirements, enabling us, in fact, to increase the flexibility and the efficiency of the first planned instrumentation.

If this demand receives your attention, we will be pleased, of course, to provide you any suitable additional information.

M. MIGEOTTE.

MM/jd.

Tentative report

Liege program of high resolution solar spectroscopy from a balloon

---

The study of the solar spectrum in the lead sulfide region (more precisely between 1.2 and 3 microns) is an important problem. Some hydrogen and helium lines appear in that domain, in addition to many other solar lines of relatively high excitation potential. The Michigan atlas, recorded in 1949, is still the only publication covering the parts of this region that we can reach from the ground. Its resolving power of about 30,000 (0.1 cm^{-1}) is not sufficient to give the possibility of studying the profiles of the majority of the solar lines and it seems now feasible to remap the same regions, from a high altitude station, using the latest possibilities of cooled PbS cells and "echelle" gratings of high efficiency. We plan to start such a program in about one year, using the facilities of our laboratory at the Jungfraujoch station.

However, it will be very useful to extend the same kind of observations to fill the "gaps" in the Michigan atlas due to telluric water vapor bands. A high altitude balloon is a powerful tool for such a study, in spite of the fact that many water vapor and carbon dioxide lines will still appear in the records.

We must insist on the importance of reaching the highest possible resolution. Solar physicists are now much more interested in lines profiles, and in center to limb variations of these profiles, than in the simple detection of new solar lines with insufficient resolution. In any case, a high resolution will also help to resolve the blending of solar and remaining telluric lines.

It is possible to estimate that a resolution of about 100,000 will be necessary to reach with sufficient accuracy the profiles of the majority of infrared solar lines. Actual gratings (single passed) have a theoretical resolution of the order of 150,000 at 2.5 microns and 300,000 at 1.25 micron, but it seems difficult (even with the Jungfraujoch installation) to reach easily these values, the limitation being given by the insufficient sensitivity of the detectors.

We have thus decided to design a balloon-borne equipment able to give the actually highest possible resolution, with a solar image of 50 to 60 mm in diameter, as needed by the plans to study center to limb profiles variations.

We have had contacts with a few european colleagues : Dr. de Jager (Utrecht), Dr. Neven (Brussels), Dr. Müller (Geneva). They are interested in our effort to design such an equipment, and they plan to use later on our gondola, in collaboration, to study specific problems.

We shall use a 35 cm diameter Cassegrain reflector (see fig. 1, mirrors M_2, M_3, M_4) installed vertically in the gondola and receiving the solar radiation from a plane mirror (M_1) accurately guided by a servomechanism to maintain the solar image fixed. The entire gondola will be oriented in azimuth by a flywheel actuated, from simple commercial sensors, with an accuracy of a few degrees.

The orientation in declination and the fine guiding in azimuth will be obtained in moving only the relatively light plane mirror. The spectrometer, installed also vertically, parallel to the telescope, will be an Ebert-Fastie of 2.5 meters focal length, equipped with a Bausch and Lomb "echelle" grating of 102 x 208 mm, working at 63°, double-passed with an intermediary slit. It will use a mirror of 40 cm diameter and work at about F : 18. A good PbS cell, cooled with liquid nitrogen, will be used, to reach maximum resolution. In some flights, a broad-band source associated with a fixed thickness Fabry-Perot in an auxiliary optical path through the spectrometer will give fringes useful for accurate interpolations of lines positions.

At the beginning, for the first flights, we shall probably not use a very elaborate guiding system : to study the center of the solar disk, an accuracy of ± 5', which is easy to obtain, will be good enough. What we keep in mind is to reserve, from the beginning, the possibility to add later on, various developments : association of a scanning Fabry-Perot interferometer in serie with the spectrometer, in order to obtain higher resolution to observe the profiles of some solar lines and installation of a very accurate guiding system for center to limb variations studies.

To collect all the obtained information, we have decided to have on-board storage in digital form, on magnetic tape. It will be very useful to have the possibility to act, from the ground, on some parameters : gain and time constant of the amplifier, scanning speed, order to skip part of the pre-recorded program, to give some examples. To make it possible, a sufficiently good telemetry will be necessary, permitting to "see" immediately the spectrum and associated with ground-command facilities.

The total weight of the equipment will be of the order of 1200 to 1800 lbs and we hope to be ready for a first flight in autumn 1966.

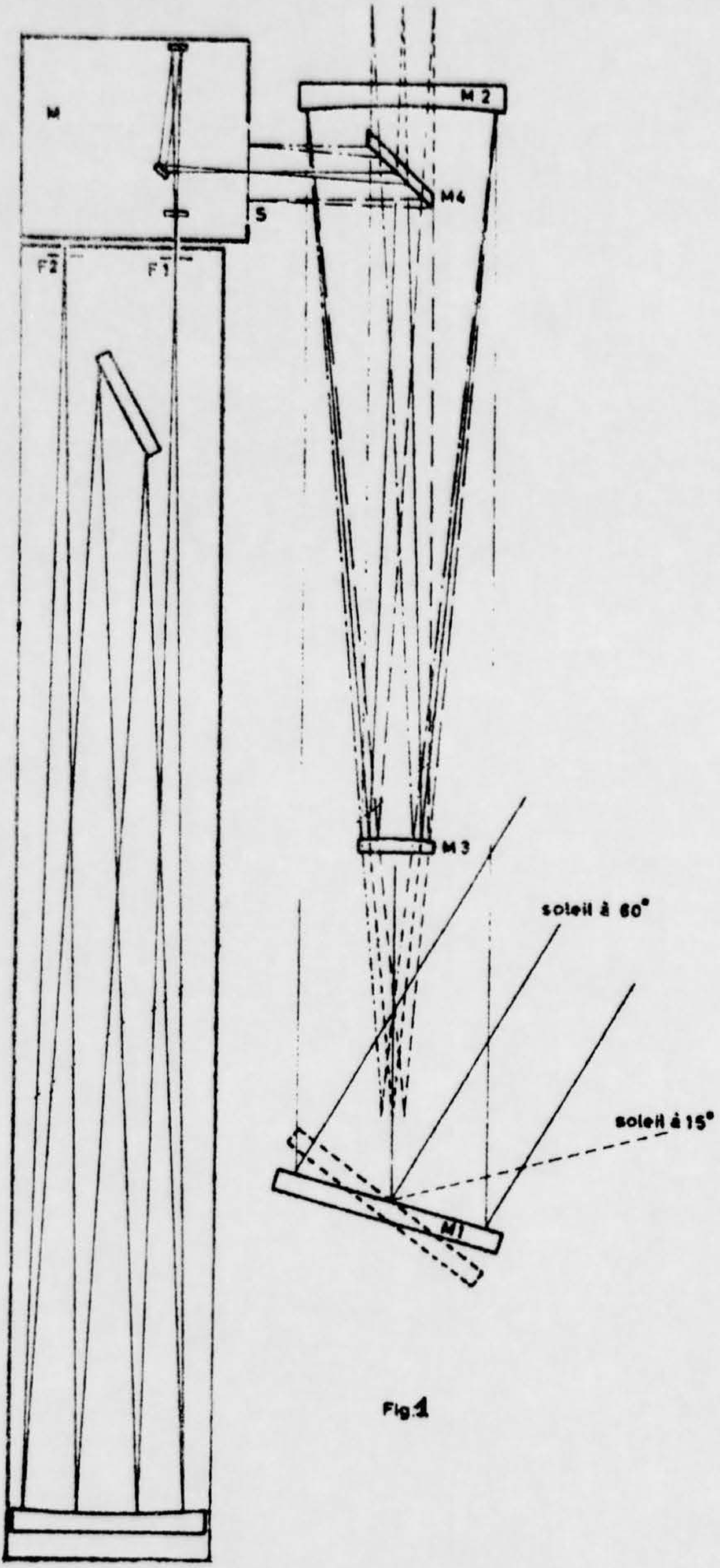

Fig.1

APPENDIX D. UNIV.
OF CALIFORNIA

APPENDIX D.

UNIVERSITY OF CALIFORNIA REQUEST FOR BALLOONING SERVICES.

University of California
Space Sciences Laboratory
Berkeley 4, California

September 3, 1964

UCBSSL No. 192

PROPOSAL FOR HIGH ALTITUDE PARTICLE PHYSICS EXPERIMENT

Duration: Two Years

First year: $1,361,322
Second year: $2,454,018

Principal Investigator: Luis W. Alvarez

Luis W. Alvarez
Prof. Luis W. Alvarez
Principal Investigator

Burton J Moyer
Burton J. Moyer
Chairman, Physics Dept.

Samuel Silver
Samuel Silver
Director

SCHEDULE

TABLE OF CONTENTS

TABLE OF CONTENTS (Cont.)

PROPO[illegible] HIGH ALTITUDE PARTICLE PHYSICS EXPERIMENT

L. W. Alvarez, W. E. Humphrey

I. Introduction

Until about ten years ago, the discovery of all unstable "fundamental particles" had come from cosmic-ray experiments. The pion, the muon, the K mesons, and the three hyperons (Λ, Σ, and Ξ) were all seen first in cosmic-ray experiments. In the past ten years, large accelerators have almost completely supplanted the cosmic radiation as a source of particles for studying the fundamental interactions. Cosmic ray physicists have for the most part abandoned their studies of the interactions of the particles and have concentrated their attention on the cosmological aspects of the radiation. This situation has arisen from the well-known fact that artificial beam intensities in the 1-25 BeV energy region far surpass those available in the cosmic radiation.

The situation in the 100-10,000 BeV energy range is strikingly different. There is no artificial intensity now available and none as high as 300 BeV will be available for the order of ten years. It has generally been thought that the cosmic ray intensity available in this region is so low as to make experiments with "natural beams" quite unattractive. We believe, because of the almost simultaneous emergence of a number of seemingly unrelated techniques, that cosmic-ray experiments of a meaningful nature in the range 100-1,000 BeV can be carried out in the upper atmosphere at altitudes around 100,000 feet.(1)

II. Proposal

The environment mentioned above is accessible by balloon and affords flux densities which are useful in terms of present-day high-energy-experimental techniques. We propose to build and fly a balloon experiment capable of making measurements of the momentum of the "natural beam" and preliminary studies of proton-proton interactions in the energy range above 100 BeV.

In concept this experiment is a return to a rich and abandoned lode with the new tools of the past decade. These new developments offer a refinement in precision in comparison to traditional cosmic-ray experiments which will make possible more detailed studies in and beyond the energy range now planned for exploitation with accelerators to be built in the next decade. In this context the experiment can reveal the gross features of the high-energy physics of the immediate future and, at the same time, perhaps provide helpful guidelines to the design of the machines being planned. In a broader context the realization of this experiment will form a basis of technique and experience for the further practicable exploration into regions of even higher energy.

The initial cost (see Appendix I) of the proposed program is small in comparison to that of the currently-known method of artificially producing high-energy-proton beams or, even, of studying proton-proton interactions at very high energies with storage rings.(2) Its projected operating costs, in terms of "dollars per event measured", are of the same order as those of present practice at lower energies.

III. Physical Description of the Experiment

Before discussing what kinds of experiment might be done at high altitudes, let us first examine, in a general way, the proposed arrangement of the experiment, and then take stock of what is available in the upper atmosphere for an experiment.

A. Experimental Arrangement

A system which fulfills the criteria of the previous section is shown schematically in Figure 1. It may be divided functionally into two parts.

The "beam" portion utilizes the Cerenkov threshold effect in gas at low pressure to detect the passage of a proton of energy greater than 100 BeV.

This enables one to discriminate against unwanted particles at lower energies by using the Cerenkov detector output as a firing pulse to wide-gap spark chambers in the "experiment" portion. The three principal features of the "experiment" section are:

1. The analysis of the momentum and direction of an incoming proton obtained by recording its orbit in a transverse magnetic field. The analysis is done by the use of a combined spark chamber/emulsion stack technique which identifies the proton in time and space.

2. The provision of a two-meter liquid hydrogen target for p-p interactions.

3. The display and recording of the trajectories of the interaction products which result from the traversal of the proton by using a wide-gap spark chamber in a second, transverse magnetic field.

After a flight the spark chamber photographs are scanned and measured. Data from the upper chambers give a rough estimate of the momentum of the proton. For those events where greater precision is desired, the emulsions may be scanned. From a knowledge of the proton's initial direction and momentum and data from the interaction chamber films, the vertex can be recreated and the interesting properties of the interaction products computed.

During its flight the system functions automatically and reports the relevant details of its operation to a ground base. A typical balloon flight will probably last about 24 hours. The anticipated duration of the series of balloon experiments is from three to seven years, depending on how well the experimental results live up to the optimistic forecast.

B. Nature of the Primary Radiation

The particle "beam" consists of the natural cosmic rays at the balloon altitude. At altitudes in the vicinity of 100,000 feet, the cosmic rays are principally primary protons of energy greater than 10 BeV. The Cerenkov trigger system eliminates energies less than 100 BeV, and in the experimental arrangement described above, the flux of particles through the system will be about 10 min^{-1}.

The intensity of primary protons in the energy range above 100 BeV is usually expressed in terms of an "integral flux", J_E, where J_E is the number of particles per cm^2 per steradian per second with energy greater than E. The flux, J_E, as a function of E, is shown in Figure 2. Over the range of interest the flux is given approximately by,

$$J_E = 3\,E^{-1.5}\ \text{cm}^{-2}\ \text{sr}^{-1}\ \text{s}^{-1}$$

with E in BeV. We now introduce a term which is common in the cosmic-ray literature: the geometrical factor is the product of the detector area and the effective solid angle of the detection system. If we have a flux, J_E, and the geometrical factor, G, the counting rate, R_E, is given by,

$$R_E\,(E) = J_E G\ \text{events}\ \text{s}^{-1}$$

For our experiment (which we have not yet optimized for counting rate) we have an effective detector area of .4 m^2 and a solid angle of .025 sr (see Figure 5). This gives a G factor of 100 cm^2 sr and a counting rate for protons of energy greater than 100 BeV ($J_{100} \sim 2.5\ 10^{-3}$) of,

$$R_E\,(> 100\ \text{BeV}) = 0.25$$

which is about 15 min^{-1}. Allowing for the inefficiency of the Cerenkov trigger and attenuation of the primary proton before reaching the target, the proton flux through the hydrogen target should be about 10 min^{-1}. To put this number into proper perspective, we note that the 72-inch Hydrogen Bubble Chamber at LRL, Berkeley, pulses 10 times per minute and that it has operated usefully for long periods of time with approximately 3.6 K^- mesons incident per picture, yielding a particle flux of 35 min^{-1}.

We allow this flux to traverse the liquid hydrogen target, chosen because of the resulting great simplification in experimental interpretation. The target is two meters long and the probability of interaction is about 20%. We therefore expect to observe about two interactions per minute or 3,000 per 24-hour flight. Because of the character of the cosmic-ray spectrum, about 600 of these interactions will involve protons of energy greater than 300 BeV, and about 100 of them will involve protons of energy greater than 1,000 BeV.

The mean free path for high-energy-particle interactions in the atmosphere is about 50 gm cm^{-2} so it is imperative that the experiment be performed at "balloon altitudes". The density of liquid hydrogen is .07 gm cm^{-3} and our target, therefore, has a surface density of 14 gm cm^{-2}. At 100,000 feet altitude, the remaining air mass has a surface density of 9 gm cm^{-2}. Comparing these densities with the atmospheric interaction length of 50 gm cm^{-2}, it is obvious that no useful purpose would be served by going to higher altitudes. For these reasons, we will consider that the normal ballon altitudes of 85-100,000 feet are adequate for the experiment.

In addition to the proton flux, there is also an alpha particle flux of about 7% the intensity of the proton flux with about the same energy distribution in terms of energy per nucleon.(3) Other heavier cosmic-ray components are well below 1% of the proton flux. All cosmic rays heavier than protons should be easily identified by the large pulses they produce in counters.

In summary, then, the effective cosmic-ray "beam" can be thought of as three beams; a 10-per-minute, 100-800 BeV proton beam, and the weaker alpha particle and 1,000 BeV proton beams. These components of the beam may be separated and the momentum should be known to 10% or better for most particles. The nature of the beam can be altered in later flights by inserting into it target matter to produce a secondary meson and hyperon beams. The obvious way to do this is fly the experiment under a few interaction lengths of atmosphere -- say around 75,000 feet. The principal difficulties with this idea are the large electron background which might plague the Cerenkov trigger device, and the problem of identifying the secondary particles.

C. Purpose of the Experiment

Studies of cosmic-ray interactions in nuclear emulsion reveal several interesting properties. One striking effect is that the average transverse momentum of secondaries is very close to .3 BeV/c, independent of the energy of the incident primary particle.(4,5) Another interesting fact is that the inelasticity of the interaction (energy lost by the primary proton) is about 30% at the lower energies, decreasing as the energy increases.(6) Also, the interaction length is fairly independent of primary energy and is around 50 gm cm^{-2}.

The secondaries usually have energies well below 1 BeV in the center of mass system.(4) Although interactions taken as a group appear to be symmetric with respect to a plane normal to the incident particle, the individual interactions are sometimes quite asymmetrical.(5,7) More detailed knowledge than this is very hard to obtain with conventional emulsion techniques.(7) There are several reasons for this.

1. The analysis of events depends strongly on the knowledge of the momentum of the incident particle in order that the transformation to the center of mass may be carried out correctly. With previously used emulsion techniques, the energy of the incident particle may be uncertain by as much as a factor of four.(8)

2. The method of detection of the events is highly biased in favor events with high multiplicity of secondaries which produce showers

that serve as the signature of an interaction.(4)

3. The target particle is unknown.

4. Statistics are low.

The experimental techniques outlined in this proposal largely overcome all of these deficiences. The next closest present solution to these difficulties is the work of the Russian group at the Pamir cosmic ray station done with cloud chambers and total absorption proportional counters on a 3900 meter mountain.(9) Even these experiments have about a 30% error for the energy of an incident particle and a rate of 4×10^{-4} events per minute with a LiH target of .10 interaction length. We expect a four order-of-magnitude increase over this in our experiment using the .25 interaction length hydrogen target.

The energy region we propose to study is of particular interest. Above 1,000 BeV, the production of secondary particles can be described phenomenologically by the reaction:

$$N_1 + N_2 \rightarrow N_1' + N_2' + F_1 + F_2$$

where N_1 and N_2 are the original nucleons and F_1 and F_2 are "fireballs" or clusters of mesons which trail behind the final nucleons, N_1' and N_2'. The fireballs are considered to break up isotropically in their center of mass.(10) In this model, anisotropic secondary emission can be explained in terms of one fireball being weak or absent. The interesting thing about the energy dependence is that below 1,000 BeV, the fireballs appear to separate so slowly that they can interact with each other or form a "dumb-bell"-shaped fireball. Both the distinct fireballs and the fused fireballs could be studied with the proposed experimental techniques. Although the fireball model is pure phenomenology, there are several other theories on a more sound theoretical footing which, under the proper assumptions, are believed to reproduce the general predictions of the fireball model.(11) The fireball model describes only a portion of the observed events, and even those which are characterized by the fireball hypothesis show deviations. One such deviation is the frequent appearance of a pion which accompanies one of the nucleons after the interaction. This pion is thought to be the decay product of a nucleon resonance produced in the interaction. There is clearly a great deal yet to be learned about the interaction mechanism for proton-proton collisions in the 1,000 BeV energy region.

The above paragraphs serve to suggest that the present proposal would allow an analysis of cosmic ray events along conventional lines, but with far more precise information about each interaction, which could be used to test the several existing models for cosmic ray interactions. In addition, there are numerous other experiments proposed for super-high energy accelerators that would also apply to balloon experiments.(12) More than likely, this would be merely a starting point, and the ability to examine events in detail not previously available in a relatively unexplored energy range would bring to light new phenomena requiring further investigation.

IV. Experimental Techniques and Design of the Experiment

The experiment we propose to build is a complex undertaking and has a strong developmental aspect, inasmuch as some of the techniques planned for it are novel and some of its components will have to be carefully designed and modeled in prototype. In this section we describe the elements of the experiment and examine the pertinent developmental problems of each from the standpoint of physical and engineering plausibility. The design we present is by no means a final one, but shows that it is possible to meet the experimental criteria within the weight and evnironmental constraints. Although it will be necessary and desirable to make use of computer solutions in the final design, we believe that such a study will present no essentially new results to the analysis presented here.

ADVISORY PANEL ON THE SCIENTIFIC USE OF BALLOONS

MEETING -- 15 NOVEMBER 1965

SCHEDULE

Monday, 15 November 1965

8:30 AM	Convene in Sommers-Bausch Room of the High Altitude Observatory.
11:30 AM	Break for Lunch
1:00 PM	Reconvene in Sommers-Bausch Room

A. The Cerenkov Trigger

One basic problem with cosmic ray balloon experiments is the large flux of low energy (10 to 100 BeV) protons that are of little interest and must be rejected. We propose to make use of the Cerenkov light of a proton passing through gas in order to discriminate against the low energy proton background. For the balloon altitudes at which our experiments would be executed, the Cerenkov light from the atmosphere has a threshold at a proton energy of about 300 BeV. Although this atmospheric Cerenkov light could probably be used as a trigger for protons in excess of 300 BeV,(13) there are several advantages to using a gas other than air. By using a gas of relatively high index compared to air (for example, butane or carbon tetrachloride), the Cerenkov threshold energy can be reduced to about 100 BeV for protons. There are two big advantages to using the lower 100 BeV threshold. First, there is a far larger flux of particles at the lower proton energies, and the proton interactions are still of interest in this energy range. Second, the increased index of refraction results in about a five-fold increase in the photon yield of the particle.

The increased photon yield makes practical a fully enclosed Cerenkov counter of reasonable dimensions. Protons having an energy appreciably above the 100 BeV threshold (say 200 BeV) will yield a sufficient quantity of photons in passing through 10 meters of gas to produce about 6 photo-electrons at the cathode of a photomultiplier, which is sufficient for reliable triggering. (If the Cerenkov threshold is 100 BeV, then the trigger efficiency actually rises to 75% of its maximum efficiency at 150 BeV. The index of the gas can be increased to give an effective 100 BeV cutoff, together with a slight increase in the photon yield over that used in these calculations.) The figure of 6 photo-electrons is achieved through the use of a light collector consisting of aluminized mirrors, and a photomultiplier with a fused silica face (in order to make full use of the ultraviolet-rich Cerenkov light) (See Figure 1). For a 100 BeV threshold, the maximum half angle for the cone of Cerenkov light is 10 milliradians; which is small compared to the angle of acceptance required for the protons. Therefore in the design of the light collection optics, it is possible to treat the Cerenkov light as though it has approximately the same direction as the proton. The first mirror serves to image the exit aperture of the experimental train onto collimating stops, so the Cerenkov light is only collected from protons which would pass through the entire apparatus. The required mirror surface is a hyperbola of revolution. The second mirror (an ellipsoid of revolution) serves to further concentrate the light onto photomultipliers located at an even smaller image of the exit aperture. The demagnification of the exit aperture at the photomultiplier is about 7 to 1, so that a 4 inch diameter photomultiplier would detect protons traveling toward a 28 inch diameter aperture at the exit aperture.

The principal source of background for a Cerenkov trigger is electrons. Electrons of 50 MeV energy or greater can trigger the system. The electrons can be discriminated against by placing a radiation length of lead in front of a scintillation counter and detecting the shower produced by an electron. However this technique is only effective for electrons with energies in excess of about 500 MeV. The lower energy electrons can be eliminated by deflecting them out of the "beam" in a magnetic field such as the one that is proposed for mementum analysis of the protons. Cosmic rays below about 10 BeV would be deflected by the earth's magnetic field, so the electron background would consist of electrons produced by proton interactions in the atmosphere above the balloon.

To further reduce accidentals, the Cerenkov trigger would be used in coincidence with scintillation counters just below the Cerenkov light collector and just above the hydrogen target. The counter in front of the target could also be used to discriminate against particles which interact in the apparatus above the target, by detecting a scintillation pulse in excess of that for a single relativistic particle. The electronics for the Cerenkov counter photomultiplier should be fairly fast (about 10 nanosecond time resolution) up to the pulse height discriminator, which should be set for two or three photoelectron pulses. There is one 5-inch tube (RCA-C70133) that has extended response in the ultraviolet and good time resolution which might do, but quartz-faced 2 inch tubes are available with higher sensitivity in the far ultraviolet, and several such tubes connected in parallel would be suitable for use, at least until a special tube could be fabricated. A quartz faced tube may not be necessary if a "wavelength shifter" is used to convert the ultraviolet light into visible light.(14)

The important practical details that remain to be investigated are the properties of the gas which produces the Cerenkov light and the construction of the light-tight Cerenkov gas container. The gas must be tested to determine that light produced by protons through ionization and recombination is sufficiently small to neglect. Naturally, precautions should be taken to blacken everything possible in the light collector in order to absorb such isotropically emitted light. The gas must also be checked for transparency in the ultraviolet region. The transmission for carbon tetrachloride has been reported in the literature and is satisfactory, but the transmission, and even the exact index of refraction of butane gas must be established. The Cerenkov gas enclosure can be a light structure because the Cerenkov gas is used at approximately local atmospheric pressure. Samples of mylar-aluminum balloon material have been looked at and are probably adequate for the walls of the enclosure. The Cerenkov gas pressure might be used to support the enclosure in the form of a balloon. An alternate light tight enclosure could be fabricated in the form of a bellows-like bag of opaque material. The support cables which attach the experimental apparatus to the balloon would also serve to shape and support the light-tight bellows. The overall weight of the Cerenkov trigger should not exceed 500 pounds.

B. Spark Chamber - Emulsion Techniques

In the energy range of 100 to 1000 BeV, multiple Coulomb scattering is greatly reduced over that normally dealt with in accelerator experiments. In order to take advantage of the potential increase in precision of angular measurement, new techniques must be developed that are capable of measuring angles of the order of a few microradians. We propose that a likely method for accomplishing these measurements is through a union of spark chamber and emulsion techniques.(13) The orbit of a particle can be roughly established (to a fraction of a millimeter) by photographing several spark chambers along the orbit. The precise orbit may be then established by looking in emulsions located along the particle orbit for tracks having the position and orientation predicted by the spark chamber photographs. Flights of about 24 hours would be practical with emulsions. Longer flights would result in increased difficulty of analysis due to a large number of background tracks in the emulsion. The spark chamber serves to provide time resolution and reduces emulsion scanning to a simple operation, while the emulsions provide micron accuracy in measuring the particle orbit. Figure 3 illustrates a possible combination of spark chambers and emulsions.

The ease with which the desired track may be identified from the spark chamber information depends, on the number of background tracks. The total primary proton flux is about .2/cm^2-sec.-sr, or about 1700/cm^2-sr in a 24 hour flight. Secondaries from interactions in the upper atmosphere and in the apparatus will double or triple this figure. Take as a working figure about 4000/cm^2-sr in 24 hours. If the position is known to .5 mm and the angle in the emulsion is known to a degree or better (distortion of the emulsion in processing limits the angular resolution), then the background (B) expected for a

24 hour flight in this cell of phase space is

$$B = (\text{flux})\ (\text{area})\ (\text{solid angle})$$
$$= (4000)\ (\tfrac{1}{20})^2\ (\tfrac{2}{57})^2$$
$$= .12 \text{ background tracks}$$

This estimate is an upper limit to the background. There are several ways to reduce the background problem. One way is to include an additional fourth emulsion plate after the set of 3 emulsions that would normally be used. Any ambiguous tracks found in the first three plates would predict a position in the fourth plate to micron accuracy, and a coincidental track in the fourth plate would be orders of magnitude less likely than in the previous plates. The fourth plate need only be examined in case there is an ambiguity in one of the first three plates. Another trick which could be employed would be to use double emulsion plates arranged to slide against each other under the control of a clock drive. Since the time of the interaction is precisely known from the trigger pulse, it is possible to position the plates as they were at the instant the particle passed through, and detect the correct particle by seeking the track which is unbroken at the interface of the emulsion in the region of the emulsion predicted by the spark chambers. Another obvious way to reduce the background is to refine the positional prediction in the emulsion and to improve the angular resolution in the emulsion in order to reduce the size of B. In this regard, recent reports of wire spark chamber performance are encouraging. Wire spark chambers avoid the problems of optical recording techniques and their many sources of distortion. The angular resolution might be improved by the use of emulsions which are thinner than the standard .6 mm nuclear emulsion (say .3 mm) and by the use of glass plates with emulsion on both sides of the plate. The latter approach of using two sided emulsion plates is a very attractive arrangement because the angle is then known to a small fraction of a degree by examining the position of the particle before and after

24 hour flight in this cell of phase space is

$$B = (\text{flux})(\text{area})(\text{solid angle})$$
$$= (4000)\left(\frac{1}{20}\right)^2 \left(\frac{2}{57}\right)^2$$
$$= .12 \text{ background tracks}$$

This estimate is an upper limit to the background. There are several ways to reduce the background problem. One way is to include an additional fourth emulsion plate after the set of 3 emulsions that would normally be used. Any ambiguous tracks found in the first three plates would predict a position in the fourth plate to micron accuracy, and a coincidental track in the fourth plate would be orders of magnitude less likely than in the previous plates. The fourth plate need only be examined in case there is an ambiguity in one of the first three plates. Another trick which could be employed would be to use double emulsion plates arranged to slide against each other under the control of a clock drive. Since the time of the interaction is precisely known from the trigger pulse, it is possible to position the plates as they were at the instant the particle passed through, and detect the correct particle by seeking the track which is unbroken at the interface of the emulsion in the region of the emulsion predicted by the spark chambers. Another obvious way to reduce the background is to refine the positional prediction in the emulsion and to improve the angular resolution in the emulsion in order to reduce the size of B. In this regard, recent reports of wire spark chamber performance are encouraging. Wire spark chambers avoid the problems of optical recording techniques and their many sources of distortion. The angular resolution might be improved by the use of emulsions which are thinner than the standard .6 mm nuclear emulsion (say .3 mm) and by the use of glass plates with emulsion on both sides of the plate. The latter approach of using two sided emulsion plates is a very attractive arrangement because the angle is then known to a small fraction of a degree by examining the position of the particle before and after traveling through the glass, with essentially no corrections necessary since the glass is relatively distortion free.

As an example of the momentum resolution attainable by emulsion measurements, consider the arrangement of Figure 3 for the case of standard nuclear emulsions (0.6 mm thick) supported on glass plates 3 mm thick. The error in determination of the momentum can be attributed to the uncertainty of the sagitta measurement. One source of sagitta error is the measurement of the track coordinate, which can be done to one or two microns. Another source of error is the mechanical stability of the position of the emulsions with respect to each other, and this is probably also of the order of a few microns. The remaining source of error is scattering in the central emulsion plate. The plate has a nuclear interaction length of only about 1 g/cm^2, so that nuclear interactions will be rare (2%), and undetectable interactions will be much rarer still. For these reasons, only the Coulomb multiple scattering will be considered. There is a "tail" of large angle single scatters for the case of Coulomb scattering, but for the most part, the rms sagitta error (in cm.) will be given by

$$\Delta s = \frac{3.1\,\ell}{p}$$ where p = particle momentum in MeV/c. and

ℓ = emulsion separation in cm.

The expected sagitta (in cm.) is

$$s = \frac{2\,\ell^2}{p}\,(.3H)$$ where H is the magnetic field

(uniform, in kilogauss)

It is interesting to note that if the only source of error were Coulomb scattering, then the fractional momentum error would be independent of momentum, as given by the formula

$$\frac{\Delta p}{p} = \frac{\Delta s}{s} \cong \frac{5}{\ell H}$$

This result is valid up to momenta at which the sagitta measurement error comparable to the false sagitta from Coulomb scattering, so it would be reasonable to choose ℓ to give approximately equal measurement and Coulomb errors at the higher useful momenta. As an example, for $\ell = 50$ cm, and $p = 10^6$ MeV, $\Delta s = 1.5$ microns. Taking the combined sagitta error to be about 3.5 microns, and assuming a magnetic field of 3 kilogauss, the momentum is determined to better than 8% for all protons having a momentum less than 1000 BeV/c.

C. Wide-Gap Spark Chambers

The wide-gap spark chamber, or "discharge chamber", recently developed by Alikhanian and his collaborators,(5) triggered by a pulse from the Cerenkov trigger, completes the experimental train in the balloon load. This type of spark chamber appears to be able to provide spatial resolution comparable to that of a hydrogen bubble chamber.

Spark chambers of this type have been built by Strauch(16) at Harvard, and their performance is excellent in all respects. His chambers have the form shown in Figure 4. They are sensitive for 5 μ sec and require no clearing field. The pulser is a Marx generator using 15 standard "color television" capacitors charged in parallel to 30 kV and discharged, by spark gaps in series, at 450 kV. The light intensity is high enough for photography at f/45, so a good depth of focus can be obtained. Strauch(16) advises taking two photographs, one at f/45 and another at f/12, on the chance that fainter tracks may also be present. He shows pictures with about 20 tracks of good quality in the chamber simultaneously. Tracks can branch, as shown in the left-hand side of Figure 4. He compared the measured momentum of cosmic-ray particles in the upper and lower halves of a 32-inch high-double chamber and found the RMS deviation at 1 BeV/c to be about 1.4% in a 15 kG magnetic field. This is quite comparable to modern bubble chamber standards.

We plan to use these chambers for detecting secondaries of the interactions. Strauch(16) reports that tracks can be seen up to 40° from the electric field direction. Assuming $\beta \cong 1$ for secondaries in the center-of-mass system the median angle, θ_m, for secondaries is given by (4)

$$\theta_m \cong \sqrt{\frac{2m_p C^2}{E_p}}$$

where the subscript "p" refers to primary proton. For 200 BeV protons, θ_m is about 6°, and the detectors should have good geometry for most secondaries from an interaction in the hydrogen target. (Actually, the motion imparted to mesons which leave a fireball that travels backward in the center of mass is such that occasional particles come off at angles of 50° or more in the laboratory system. This is a reason for considering thinner targets such as a LiH target. (See Appendix II)

Evidently there is a good deal of development work being done on these chambers and our major effort will be one of adaptation to the problem at hand. One interesting developmental experiment will be seeing if the chambers will operate at 230° K, the temperature of the stratospheric environment or, indeed, if they will operate at cryogenic temperatures as a step in simplifying the design of that portion of the experiment.

D. Superconducting Magnets

Magnetic fields are used in this experiment to provide a means of analyzing the momentum of the incident proton and of interaction products from the target. Because of power and weight constraints, these magnets must be superconducting.

Since 1961, when Kunzler and his collaborators(17) stimulated great interest in superconducting magnets by developing wire cored with a high-field superconductor, Nb_3Sn, many useful coils have been wound. These magnets operate losslessly, utilizing the effect that, at sufficiently low temperatures and below a critical value of applied magnetic field, high-field superconductors have vanishingly small dc resistance and support high critical current densities ($\sim 10^5$ A cm^{-2}). Though the application of this effect has been far less direct than this simple statement would imply, the physics of high-field superconductors is now essentially understood, at least in phenomenological terms, and there are in fact six firms engaged in the commercial production of small research magnets up to 80 kG.

An early attempt to account for the discouraging critical current degradation observed in superconducting magnets was made by Montgomery(18) and by Chandrasekhar and Hulm(19) who introduced the idea that the degradation was dependent on the size of the magnet. This idea reached the status of a theoretical model by Smith and Rorschach (20), but has been discredited in experiments of Coffee and Gauster(20) and, indeed, by the general experience of workers in the field. The most outstanding testimony to its inapplicability is provided by Koii(21), at Lockheed/Palo Alto, who has wound large-diameter hoop coils as part of an Air Force sponsored feasibility study to provide electron shielding for the Agena vehicle. His largest coil is six feet in diameter, has 33 lb. of 10 mil 3NbZr windings, and performs comparably with small coils (field at origin, B_0 = 800 G, field at windings, B_s = 20 kG, critical current, I_C = 18.5 A).

Large values of integrated field are required to resolve the range of momenta under study in this experiment. Inasmuch as the necessary counting rates dictate the use of a large aperture, the field strengths needed are low. Superconducting magnets producing relatively uniform fields are planned. There are four reasons for this design:

(1) An important benefit of field uniformity in a large-gap magnet is

AGENDA

the weight reduction that results from the lowering of the field at the windings and the subsequent relaxation of the motor forces on the windings. If we consider two simple examples of magnet producing the same field, B_0, at the origin, a current loop and a uniform-field sphere, then the conductor mass required for the sphere is 1.18 that for the loop, but the mass needed to constrain the windings is reduced by a factor of B_0/B_s, where B_s is the field at the surface of the windings of the loop. In the coils under consideration this involves combined conductor and constraint weight reductions of about 45%.

(2) A second, equally important consequence of lowering the winding field is that one operates the superconductor well below the so-called high-field region where its useful application is just emerging. Therefore, we have the comfort of not having to hinge the success of the experiment on the development of 100 kG techniques.

(3) The use of uniform fields tends to minimize the effect of relative displacement of components in the system and reduces errors.

(4) The uniformity also reduces the computation and errors in the data reduction by increasing the order of the corrections which must be applied. In operation, the two magnets will first be precooled with liquid nitrogen and then, if practicable, with liquid hydrogen (the enthalpy to be removed is 10^2 MJ). Liquid helium will then be introduced and, when cold, the magnets will be energized. Before the flight begins they will be shorted with a thermally-activated, superconducting or "persistent" switch. It will probably be necessary to de-energize the magnets before the vehicle returns to earth and, in any case, one will have to provide a means for protecting the magnets and equipment affected by their fields in the event superconductivity is destroyed and a magnet "quenches". Before discussing the dissipation of the stored field energy of a large, superconducting magnet, let us get a feeling

for its plausibility in this application. Although the magnets ultimately designed for this experiment need only take some approximate form of the general ellipsoid and may have access holes at the poles for photography and, possibly, beam windows on the equator, we will consider a simple example of a large-gap, uniform-field coil.

The 1.5 m-diameter, 15 kG field required for the 1 m-square wide-gap spark chamber is produced by a spherical magnet wound with 10 mil-diameter 3NbZr wire supporting a winding current density, J_W, of 2×10^4 A cm^{-2}. The gap field (in practical cgs units) is given by,

$$B_0 = \frac{8\pi J_w t_0}{30}$$

oriented along the polar axis, $\theta = 0$, and the coil has a radial winding thickness of

$$t = t_o \sin \theta$$

The mass of this shell is given by

$$M = \frac{15\pi\ B_o a_o^2 \rho}{4\ J_W}$$

Whereas a_o is the mean radius and ρ is the density of the windings. In the example under consideration, the coil mass is 690 lb. of which 440 lb. is superconductor, the balance being divided between copper-cladding on the wire (140 lb) to help protect it and stabilize its operation against "flux jumping", and high thermal conductivity epoxy and glass filament to bond the structure.

The stress analysis of the spherical magnet is complicated by the finite thickness and strongly anisotropic character of the wire-filament-epoxy composite. Fortunately, the maximum stresses which arise are comparable to those found in current experience and well within the limits of the materials. The motor forces on the conductor, averaged over the shell thickness, are radial outward and tangentially directed toward the equator. We resolve these into components normal and parallel to the polar axis and assume that normal component is locally supported by the conductor. The resulting hoop stress, s, is given by

$$s = \frac{3}{32\pi} \quad \frac{B^2 a_o}{t_o} \; (\sin^2 \theta + 4 \cos^2 \theta) \text{ dyne-cm}^{-2}$$

This stress has a maximum value of 2.8 x 10^4 lb wt in^{-2} at the poles (where the conductor area tends to zero). This is about 13% of the yield strength of the wire.

The parallel component is supported by the shell and results in a maximum attraction between the hemispheres at the equator of

$$S_y = -9/8 \; \frac{B^2 a_o{}^2}{8} \quad \text{dyne}$$

which gives a compressive stress of 4 x 10^3 lb wt in^{-2}. This is about 1/5 of the low temperature compressive strength of glass filament epoxy. As a result of this loading there will be additional hoop stresses, tensional at the equator and compressional at the poles, having magnitudes of a few thousand lb wt in^{-2}.

On the inside face of the windings the local hoop stress in the wire rises to 2.8 x 10^4 lb wt in^{-2} and gives local sheer stresses as high as 1.6 x 10^4 lb wt in^{-2}. This is comparable to the sheer strength of the epoxy and may require selected orientation of the glass filament. We plan to examine the problem of forces in detail, paying particular attention to local stability and to the dynamic aspects, as it is very important that the superconductor be immobile with respect to the field. In keeping with current practice, ignoring accessibility requirements, let us gain additional rigidity for the magnet by winding it with 2 lb wt wire tension on the surface of a stainless steel pressure vessel thick enough to provide elastic stability against the collapsing pressure of the windings. This spherical shell is .2 cm thick and weighs 230 pounds bringing the coil weight to 920 pounds.

The stored energy in the field generated by this magnet is 3.5 MJ. If the wire carries 20 A, then the inductance is 1.8×10^4 H. This offers no problem so far as energizing is concerned; a 200 V, 4 kW supply can do it in about half an hour. If the magnet is de-energized or, in the worst case, quenches, the situation is not so pleasant, as one must avoid locally annealing the wire or bringing the field down so fast so as to distort the coils or adjacent apparatus.

The way to obviate the problem of quenching is to spread the disturbance as rapidly as possible thermally and, in the case of a large magnet, let the field collapse at a safe rate. The former can be accomplished by providing high local thermal conductivity to a sink of high specific heat and by breaking the coil electrically into many shorted sections so as to promote the quenching generally by mutual coupling. The field can be made to decay slowly by providing a very well coupled secondary of low resistance and a short primary time constant so as to decouple it from the energy. Fortunately, this is easy to do in a large coil because the fraction of total volume taken up by windings is small.

The time constant, τ_o, of a spherical shell of resistivity, γ, with a current distribution appropriate to the uniform field does not depend on the number of turns in the shell and is approximately given by

$$\tau_o \cong 2\pi \times 10^{-9} \frac{a_o t_o}{\gamma} = 2\pi \times 10^{-9} \frac{M}{\pi a_o \rho \gamma}$$

where M is the mass of the shell of density, ρ. The 140 lb of copper cladding on the wire is an almost ideally-coupled secondary, as well as being electrically and thermally intimate to the superconductor. If we assume these relationships to be perfect so that the specific heat of the 3NbZr is available, then the adiabatic dissipation of 3.5 MJ produces a temperature rise of 120°K. Unfortunately, the change in the resistivity of the copper with temperature implies a system time constant of about .6 sec. This sounds rather fast, so we will take advantage of the nonlinearity of the dependence of resistivity on temperature and add another 300 lb of copper to get a time constant of about 10 s.

As we are constrained by the vehicle weight limitation, we will assert that this solution is satisfactory, though we recognize that the quenching problem constitutes a major development area in building the bigger magnet. When we have dealt with the lesser problem of decoupling the primary and ensured the local protection of the superconductor, we will examine the general effect of field collapse. If the 10 s. afforded by 440 lb of copper proves to be impossibly fast, and something of the order of minutes seems reasonable, there are two alternatives. We can keep the copper in the temperature range of its residual resistivity by cooling it with liquid hydrogen from the target. A 300 lb copper shell, surrounding the windings for good coupling but thermally isolated from them, would take about 45 s to dissipate the field energy and boil off about 100 liters of LH_2, a reasonable quantity in terms of the boiling heat transfer coefficient for hydrogen and the available area.

If this is insufficient, we can try another metal, like sodium, which generally surpasses copper electrically and thermally at low temperatures and is about two orders of magnitude better in this application because of these properties and its low density. Taylor(22) at LRL, Livermore, has studied the use of sodium for cryogenic magnets and reports obtaining residual resistances of the order 10^{-9} ohm-cm in finished magnet assemblies.

If we replace copper with sodium in the example of the previous paragraph, we get a decay time of about 4×10^3 s.

In charging the magnet, any shorted turn will cause a dissipation of energy at cryogenic temperatures and lengthen the charging time. However, assuming unity coupling between primary and secondary, the energy transfer ratio, R_W, is related to the primary and secondary time constants, τ_ρ and τ_s, and is given by,

$$R_W = \frac{\tau_s}{\tau_\rho + \tau_s}$$

We merely need charge the magnet in a time long in comparison to the secondary time constant to avoid this inconvenience.

Another problem to be solved in the development of these magnets is the one of quality assurance for the wire. At present it is practicable to buy wire in 20,000 ft lengths. For the bigger magnet this means about 100 pieces of wire. It will be desirable to wind each piece into a solenoid capable of developing about 20 kG at 20 A, using a coil form designed as a supply spool for the winding machine. Each solenoid will be tested at 4.2°K and then, having passed performance specifications, its wire will be wound into the magnet. In order to keep the handling costs down, we will have to work out simpler techniques for winding solenoids than those in current use. We plan to investigate the possibility of using multi-strand conductor, though the economics of this decision depend largely on what kind of warranty agreement we are able to reach with the manufacturers. The present cost of wire is about \$400 lb^{-1}; we have estimated material costs for our magnets at \$600 lb^{-1} to reflect the necessity of the assurance program.

With the provisional assertion that the quenching problem can be solved with the expenditure of an additional 300 lb of vehicle weight, the magnet now weights 1,220 lbs. Although it is not very elegant in terms of engineering design, it is mechanically rugged and magnetically stable, and it will work in principle. Therefore, it appears that superconducting magnets can provide the needed values of integrated field and still be light enough to be useful.

E. Liquid Hydrogen Target, Structure and Cryogenics

The essential problem here is first to design a strong, lightweight cryostat that will provide the necessary environment and support for the magnets and target and allow the inclusion of the spark chambers, cameras, and other equipment. Then we must integrate this structure into a vehicle which must not only have sufficient mechanical rigidity for the experiment, but must maintain its integrity in response to the rigors of flight, landing, and transportation. It must also be designed with an eye toward the possibility of internal failure or even catastrophe.

In order to investigate design problems and get some feeling for the weight of a vehicle which meets these criteria, let us again adopt the simple engineering approach used in the design of the spherical magnet in the preceding section. We will construct the cryostat with stainless steel vacuum walls, in the form of cylinders and spheres of sufficient wall thickness to be stable against a pressure of two atmospheres, and use metallized mylar "superinsulation" on the cold vessels to control the radiation heat load. This approach, shown in Figure 5, turns out to be crude "state of the art" but serves to set an upper limit to the vehicle weight and, at the same time, emphasizes that we need not go to the sophistication of spacecraft in our ultimate design.

The magnets are oriented as a quadrupole to provide rotational stability about the vertical. In this orientation the fields add, though the contribution is only about 1%. To first order, this contribution results in a 120 G gradient across the 3 kG analyzing magnet which does not seem serious in terms of the distortion of its shell. However, this is an effect which must be included in the computer design of the entire system. The hydrogen target supports the magnets. Thus a major source of heat load on the helium is returned to hydrogen temperature and all the cryogenic structures are tied together for mechanical ruggedness. As the vacuum shell must be stiff to the atmosphere, we use its strength against members in tension returning to the cold structure. The major support point for the cold structure is the platform on which the Cerenkov detector reposes; this is also the ultimate tie-point to the balloon. Lateral support for the target and magnets is provided by tension members returning to stiffening rings on the vacuum wall. The estimated weights of the components and structural members is given in Table 1. We see that the experiment seems reasonable from this standpoint with a total estimated weight of 7,760 lb, but the problem of landing is a little troublesome.

The vehicle will strike the earth in a more-or-less vertical attitude and it is undesirable that it land on the vacuum wall. Figure 5 shows a truncated tetrahedral pyramidal cage made from welded steel tubing with the experiment hanging inside, supported by elastic members for shock resistance. This design has the advantage that the balloon can be tied to the cage and that, once on the ground, the vehicle retains some of its vertical orientation and has little tendency to roll. It weights 600 lb, but this figure can probably be reduced in design, or we can turn to other possibilities, such as pneumatic pillows of multicellular structure.

Both the ground-surface and stratospheric heat loads on the cryogenic components are given in Table 2. Fortunately, because the ambient temperature drops to about 230° K, the radiation loads decrease to 30% of the 300° K value and the conduction loads to about 75%. The heat loads consist of radiation from the warm walls, support conduction, and conduction along electrical leads. All of these can be effectively counterflow heat-exchanged with the boiloff of hydrogen, and in particular helium.

The winding support structure of the magnets also acts as a heat exchanger with liquid helium circulation in imbedded copper tubes fed by gravity from a 37 liter storage vessel near the upper magnet. This supply is adequate for a 24-hour flight, including ascension time. All liquid vessels are pressurized to 1 atm absolute to keep the latent heat of vaporization high in the low ambient pressure of the stratosphere and are provided with surge barriers to prevent liquid loss from possible sudden deceleration during ascension. Hydrogen venting is done at a point well removed from the vehicle, and provision is made to jetison the target contents before landing. The total LH_2 enthalpy to 273° K is about 400 MJ, so the most energetically economical thing will be to pressurize the target and eject liquid directly, though this procedure, as well as the whole hydrogen transport problem, deserves careful study.

F. Developmental and Operational Support

Having completed our discussion of the specific elements of the experiment and the vehicle design, we will turn now to examine briefly a few relevant areas that have to do with the development and operation of the experiment. Beyond noting that detailed problems relating to the operational support of the working experiment exist and have practicable solutions, we will confine our attention to the development program and those areas affecting it.

The experiment will be operational in two years. In order to achieve this we must complete prototype testing by the end of the fifth quarter. Evidently some elements of the experiment, the vehicle for example, will require little development and may be designed in detail as soon as the physical design of the experiment is completed. Others will require considerable development or prototype effort. Fortunately, most of the testing can be done by "flying" the component in an environment chamber in the laboratory. One exception to this is the Cerenkov trigger which depends on the cosmic rays of the stratosphere for its complete evaluation. Thus we must make early contact with the realities of balloon-flying. (See Appendix II).

1. The Balloon

At the present time there are three commercial concerns offering their services to balloon users. These companies will handle all aspects of launching and recovery. As a rule of thumb, the flight of a balloon with a volume of V million cubic feet costs about 2V thousand dollars. This rate applies to simple balloon systems in the capacity range of about 1 million cubic feet, such as would be used in the first flights (see Appendix II). The larger and more elaborate balloon systems such as would be required for some of the final flights might cost up to 100 thousand dollars. For orientation, the 5 million cubic foot Stratoscope II balloon carried a 3-1/2 ton payload to 80,000 feet and cost 53 thousand dollars. We shall, therefore, assume that we do not have to become balloon experts in order to use cosmic-ray protons as bombarding particles.

We expect to start making use of these services in the third quarter to obtain data for the Cerenkov trigger development and we will establish a field support effort early to handle these experiments and get familiar with the general problem.

ADVISORY PANEL ON THE SCIENTIFIC USE OF BALLOONS

MEETING -- 15 NOVEMBER 1965

AGENDA

1. Minutes of the meeting of 16-17 September 1964.

   A copy of the minutes of the meeting of 16-17 September 1964 is enclosed, Appendix A. Acceptance of the minutes, with any necessary corrections, is requested.

2. Actions on prior Panel recommendations -- Alvin L. Morris

   A summary of prior Panel recommendations and the action taken on each will be given orally at the meeting. This is to be given principally for information but the Panel is invited to offer comments.

3. Annual Report -- Alvin L. Morris

   A copy of the Annual Report is enclosed, Appendix B. The Panel is requested to review this report critically and forward it to the Director of NCAR with Panel comments and criticisms.

4. Review of Facility activity in the current calendar year -- Alvin L. Morris

   A resume of the activity of the Facility during the current fiscal year will be given orally to bring the Panel up-to-date. Key staff members will be available to answer questions, and Panel comments are invited.

5. Ballooning requirements -- Thomas W. Bilhorn

   Requirements for scientific ballooning appear to be changing. The Panel is asked to review the evidence of this change, to be presented orally by Mr. Bilhorn, and to comment on our interpretation of the evidence. Our future course will be determined by our interpretation of stated and implied requirements; therefore it is important that our interpretation be well founded and intelligent.

6. Azimuth stabilization and startracker requirements -- Jack M. Angevine

   Several users or potential users of NCAR ballooning

2. Telemetry

The engineering problems associated with the transmission of important flight and experimental data from the vehicle are not serious, except, possibly, for those relating to altitude and power limitations. We merely mention the subject because there will be an early need, and more importantly, because nearly every element of the experiment must be considered in the design of the telemetry equipment.

3. Optics

Like telemetry, the optics planned for the experiment are quite conventional. We will need several cameras using standard bubble-chamber film, so that the data may be scanned on existing equipment. Possibly one of the cameras will be used to photograph the spark chambers in the momentum analyzer and another will be used in conjunction with the wide gap spark chamber to obtain stereoscopic photographs. In the latter case, we plan to provide polar access through the chamber magnet for photography. (The recent rapid strides being made in "filmless spark chambers" may obviate the need for cameras to record the position of sparks in the upper, narrow-gap chambers).

4. Data Analysis

For the most part, there are no major new problems involved in the scanning or measurement of photographic records which are recovered from a balloon flight. The wide-plate spark chamber will produce photographs that are easily scanned and measured on the standard bubble chamber analysis equipment. Spark chamber photos of the type required for use in the emulsion measurements need be measured in only one corrdinate to moderate precision. Although this could be done on standard bubble chamber measuring machines, it would probably be more efficient to build a special one-dimensional measuring device for this particular job. The emulsion measurement would require equipment designed to position and orient the emulsion so that the desired track is in the field of the measuring microscope and roughly along the optic axis. The desired track would appear as a wiggling spot when the microscope scanned through the emulsion depth. Once a track was identified by this technique, the precise position would be determined with respect to a 1 mm grid printed on the emulsion, as is standard practice in emulsion work.

In summary, except for emulsions, the techniques of measurement are quite conventional. The emulsion measurements would differ in that somewhat specialized equipment would be required, and the measurements would be done as the last step in the analysis of events when the particle orbit and the need for the emulsion measurement was established from a preliminary analysis of the other information. Emulsion techniques are not new to the Lawrence Radiation Laboratory. There is presently a technical staff of about 15 persons at Berkeley who scan and measure nuclear emulsions, and a program is already underway to develop automatic equipment for measurement of emulsions.

V. Conclusions

There are reasonable technical grounds for believing that meaningful and precise high-energy-physics experiments in the energy range 100-1,000 BeV and beyond can be performed in the upper atmosphere. The feasibility of these experiments depends on a number of techniques and recent technological developments discussed in this proposal. The cost of the proposed developmental and experimental program (see Appendix I) is small in comparison to other proposed methods of investigation in this energy range, though the comparison must be made with the exploratory nature of the expiments in mind.

VI. Personnel and Facilities

Professor Luis Alvarez is the principal (faculty) investigator and Dr. W. Humphrey, the co-experimenter, will serve as project leader. The Space Sciences Laboratory and its director, Professor S. Silver, will have general administrative responsibility for the project and for its relationship to the academic program. A number of graduate students who will work with Professor Alvarez for advanced degrees under the program will be employed as research assistants by the Space Sciences Laboratory and special research studies associated with the experiment will be carried out in the Laboratory.

The major part of the development of the instrumentation and the auxiliary equipment will be done by Professor Alvarez' group in the Lawrence Radiation Laboratory where facilities are already available for a project of this magnitude. The Space Sciences Laboratory will give assistance with balloon techniques and instrumentation of telemetry; the staff members of the Laboratory have considerable experience in conducting balloon-borne experiments.

VII. Budgets

The budget is set up in accordance with the division of activities described in Section VI. The Space Sciences Laboratory and the Radiation Laboratory operate under somewhat different rules and proceedures. In particular, their overhead rates differ. The budget is, therefore, divided into two parts, one covering the work to be conducted by the personnel of the Space Sciences Laboratory and the other covering the work to be done by personnel of the Radiation Laboratory. The latter is detailed in quarterly periods in Appendix I which follows the presentation of the composite budget.

Budget and Appendix I not included.

Appendix II

Preliminary Balloon Flights

The proposal outlined in the body of this paper represents what probably would be the most sophisticated package to be used in the program of balloon flight experiments. Such a device requires a great deal of engineering, ground testing and construction time, and the first balloon flight for the entire system would probably not take place until between one and two years after the program started. In the meantime, several smaller pieces of apparatus must be flown in order to test certain of the experimental techniques. Some physics would come out of these first flights. The following paragraphs describe the nature of these first few preliminary balloon flights, and what results would be expected of each. It is unrealistic to list more than a few of the anticipated test flights, because the information from the first few flights will undoubtedly determine the nature and number of further test flights. At the end of the appendix, there is a discussion of alternate configurations to the one proposed in this paper which might provide useful physics later.

Flight 1 and 2

The first flight would probably take place about six months after the beginning of the program. The principal function of this flight would be to test the operation of the Cerenkov trigger system. The most important information from this flight would relate to the durability and opacity of the light tight Cerenkov gas enclosure, and the detecting efficiency of the device. In the first flights, the launching procedure for the rather bulky Cerenkov gas enclosure would be tested.

The experimental train would consist of the Cerenkov trigger assembly itself followed by a series of two or more assemblies consisting of a lead radiator followed by a scintillation counter. The radiator-counter assembly serves to identify electrons which trigger the Cerenkov counter, by detecting the large scintillation pulse resulting from an electron shower in the lead. Several plates are needed because a single plate would not be effective for electron energies in the region below 500 MeV. If all went well, the data from the flight should be consistent with the present estimates of cosmic ray proton flux. In addition, useful information such as background counting rates and the high-energy electron flux would be available. The electron flux as a function of altitude should also be consistent with the incident proton flux and the interaction crossection. It is interesting to note that primary cosmic ray fluxes have been estimated from measurements on the earth's surface. This flight would constitute a direct measure of the integrated high energy proton flux, assuming the Cerenkov detector functioned correctly.

Flights 3 and 4

Shortly following the first flights, further flights would be carried out to test the spark chamber-emulsion technique, and the wide-gap spark chamber. The emulsions from these flights would provide a sample of data with which to develop the measuring techniques. The important point in regard to the wide-gap spark chamber would be the detecting efficiency for a shower of pions produced by a nuclear interaction. The operation of the cameras for the emulsion spark chambers and the wide-gap spark chamber would be checked out in these flights.

The experimental arrangement would consist of the Cerenkov trigger, followed by at least three emulsion plates between a pair of spark chambers, followed by a target, followed by the wide plate spark chamber, and finally a set of radiators to identify electrons, as in the first flights. Particles which are identified as high energy protons can be considered to have a straight orbit, as an aid in calibrating the emulsion measurements. With a series of three or more emulsions, in the spark chamber-emulsion module, it is possible to establish the stability of the emulsion support frame, as well as measurement techniques. Deviations from straightness for the high energy protons must result from emulsion measurement error, mechanical mounting error, and Coulomb scattering. In fact, if things go well, some estimate of the energy of individual protons might be made on the basis of the multiple scattering of the proton between emulsions.

As a check on the efficiency of the wide-gap spark chamber, the tracks found in the upper half of the chamber could be traced into the lower half of the chamber to make sure no tracks are lost. Another point of interest would be the chamber's ability to detect the individual members of the narrow central cone of pions (those moving forward in the center of mass system). The minimum angle or separation between two resolvable tracks would be established.

These flights would serve as pilot runs to the final experimental configuration. All the major experimental components would be present, and the data analysis system could be applied to data of these flights. Moreover, the physics data available from these relatively simple flights would already be far superior to that presently obtained by conventional emulsion methods.

Flight 5 and beyond

The fifth flight would probably be the earliest possible flight to carry a superconducting magnet. Among the numerous tests in this flight would be the study of magnetic interference with other equipment such as camera mechanisms, and the new recovery problems. All flights from this point on should yield valuable physics data.

Alternate physics flight configurations

Although it is desirable to fly some balloon flights with a liquid hydrogen target such as described in this proposal, there are also advantages to using other types of target material such as lithium hydride or hydrocarbons. Aside from the obvious simplification achieved by eliminating the bulky cryogenics associated with the hydrogen, there are also advantages in the form of increased counting flux and larger solid angle at the wide gap spark chamber. The increased counting flux comes about as a consequence of the shortening of the entire apparatus with removal of the hydrogen target, which allows us to accept perhaps twice the solid angle of cosmic ray protons. The more favorable geometry at the wide gap spark chamber is the result of being able to place a more compact target immediately above the chamber (perhaps inside the superconducting chamber magnet) and detect large angle secondaries which would be missed if produced in the hydrogen target.

The wide gap spark chamber, as proposed, is a two section chamber. It would probably be useful to fly some flights with material between the two halves of the chamber (for example lead to convert gamma rays for detecting π^0 mesons, or hydrogen rich target material for studying interactions of the secondaries).

A few flights without momentum analysis might also be useful. Although the momentum information from the emulsion measurements would be missing, the rapid decline of the proton flux with energy combined with the sharp Cerenkov cutoff do provide a fairly sharp energy spectrum for the protons. The proton energy could be roughly described as 150 ± 50 BeV, which would include 65 °/o of the proton flux. The gain in eliminating the momentum analysis would be the increase in flux from shortening the total length of the apparatus, as well as a reduction of the balloon package weight through the elimination of a superconducting magnet and spark chambers. The analysis of such events would proceed more quickly, without having to make the emulsion measurements for momentum information.

A combination of the above alternatives would lead to a variety of balloon flights of a modest nature in terms of balloon loads, but capable of providing valuable physics data.

TABLE 1.

Component Weights

Component	Sub-comp. weight	Weight
1. Target		
Cyl. walls	400	
Ends	50	
Misc. and plumbing	150	
LH_2 load	230	830
2. Analyzing Magnet		
Superconductor and copper	60	
Wire support	170	
Inside skin	30	
Energy dumping	100	
Misc.	100	460
3. Chamber magnet		
Superconductor and copper	580	
Wire support	340	
Inside skin	70	
Energy dumping	300	
Misc.	150	1440
4. 37 l. Helium Reservoir	100	100
5. Cryostat Structure		
Vacuum wall	1620	
Chamber mag. sphere	110	
Internal support	100	
External support	300	
Landing gear	600	
Misc.	200	2930
6. Cerenkov detector		500
7. Analyzing chamber and emulsion stacks and support		250
8. Wide-gap spark chamber		100
9. Cameras		300
10. Electronics (counters and telemetry)		200
11. Electronics (chamber supplies)		150
12. Film		150
13. Misc.		350
Total weight		7760

services have recently stated requirements for startracking and azimuth stabilized platforms. Mr. Angevine will summarize stated requirements and outline possible NCAR positions at the meeting. The Panel is requested to advise NCAR on its proper response to these requirements. Dr. Gordon Newkirk of NCAR has been asked to join in the discussion of Agenda Items 6 and 7 to give the view of a user of our flight services.

7. Progress on heavy load launch development program -- Thomas W. Bilhorn

Our program to develop and improve heavy load launch equipment and techniques will be critically reviewed by Mr. Bilhorn. Panel comments and recommendations are requested.

8. Request by Dr. Delbouille of Belgium for balloon flight services -- Alvin L. Morris

Dr. L. Delbouille of the Institut D'Astrophysique of the Université de Liège has requested that NCAR provide flight services for a series of flights planned by him and his colleagues. A brief summary of the experiment they propose and a copy of letters from Doctors L. Delbouille and M. Migeotte are enclosed, Appendix C. Dr. Delbouille and Dr. Roland toured ballooning facilities in the U.S. and determined that our facilities meet their requirements best. They were especially concerned about telemetry and command systems; our standard PCM system meets their requirements. Additional information has been requested from Dr. Delbouille in order that we might assess his operational requirements more realistically. At present we know that he wishes to fly the equipment to altitudes above 80,000 feet, that it consists of a telescope which must be directed with precision (± 5' at first, but more precisely later), that the payload weight will be of the order of 1200 to 1800 pounds, and that he hopes to make the first flight in the autumn of 1966. Additional information will be presented to the Panel at the meeting if it arrives in time.

We foresee no particular operational difficulties and the costs to NCAR beyond our normal operating costs will be almost negligible. Some equipment such as a parachute and an airborne telemetry and command unit may have to be loaned to the project on a long term basis.

The Panel is requested to approve NCAR participation in

TABLE 2

Component Heat Loads (Watts)

Component	Conduction Load	Radiation Load	Total Load (300° K)	Total Load (230° K)
1. Target	0.7	3.5	4.2	1.7
2. Analyzing Magnet	0.2	0.2	0.4	0.22
3. Chamber Magnet	0.63	0.46	1.09	0.60

FIGURE CAPTIONS

Fig. 1 The hyperbolic mirror M_1, the ellipsoidal mirror M_2, and the photomultiplier PM make up the Cerenkov counter C_1. C_1, C_2 and C_3 in coincidence trigger the entire system. To exclude interactions before the target, the pulse height in C_3 must be no more than that of a single particle.

Fig. 2 Integrated flux of high-energy cosmic ray protons as a function of the integration limit energy.

Fig. 3 Spark chambers S_1, S_2, and S_3 are used to locate particle tracks for precise measurement in nuclear emulsions E_1, E_2, and E_3 located in the uniform magnetic field B.

Fig. 4 Schematic of Strauch wide-gap spark chamber.

Fig. 5 Section of proposed experimental structure.

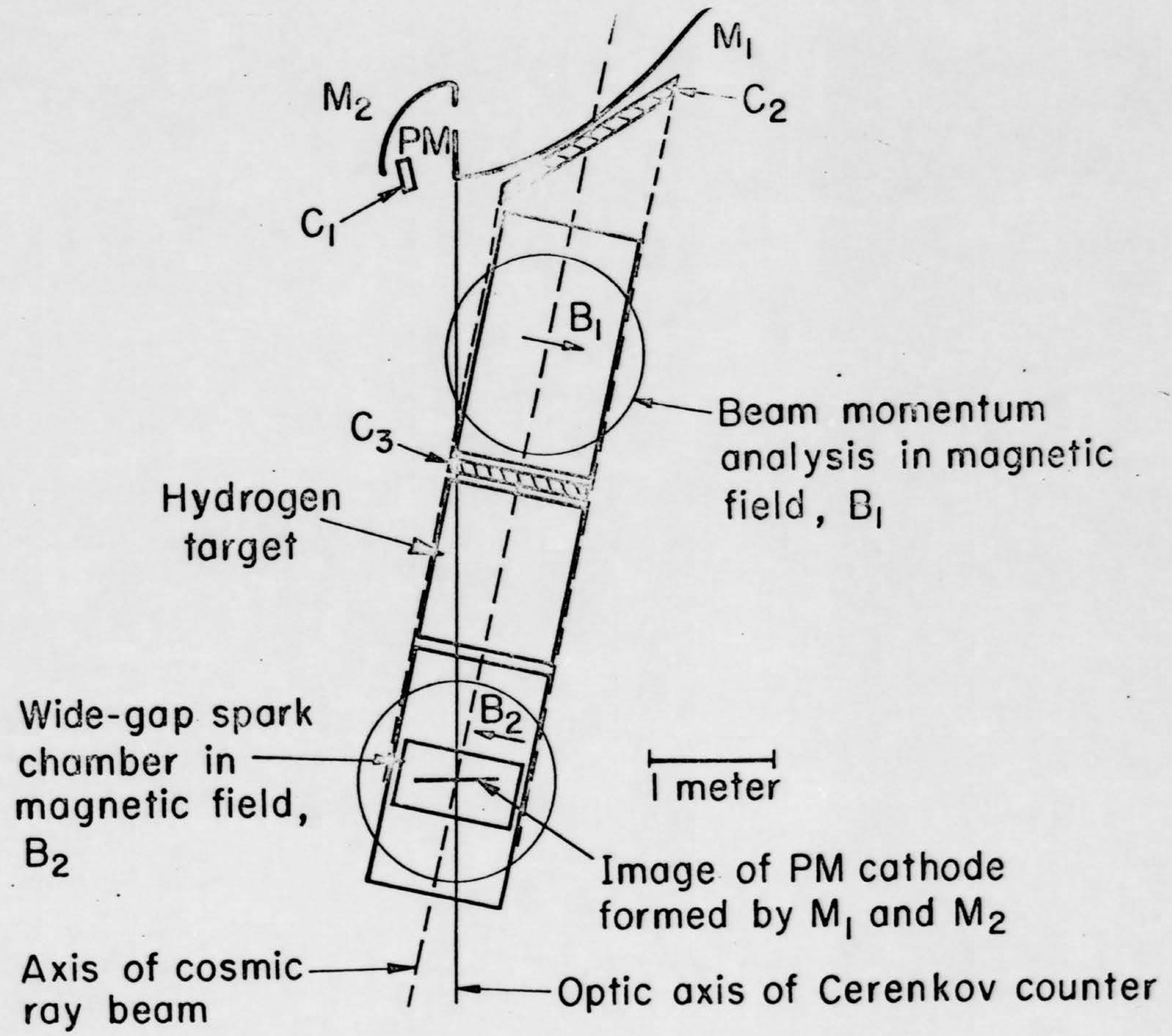
M1
M2
PM
C2
C1
B1
Beam momentum analysis in magnetic field, B1
C3
Hydrogen target
B2
Wide-gap spark chamber in magnetic field, B2
1 meter
Image of PM cathode formed by M1 and M2
Axis of cosmic ray beam
Optic axis of Cerenkov counter

Fig. 1

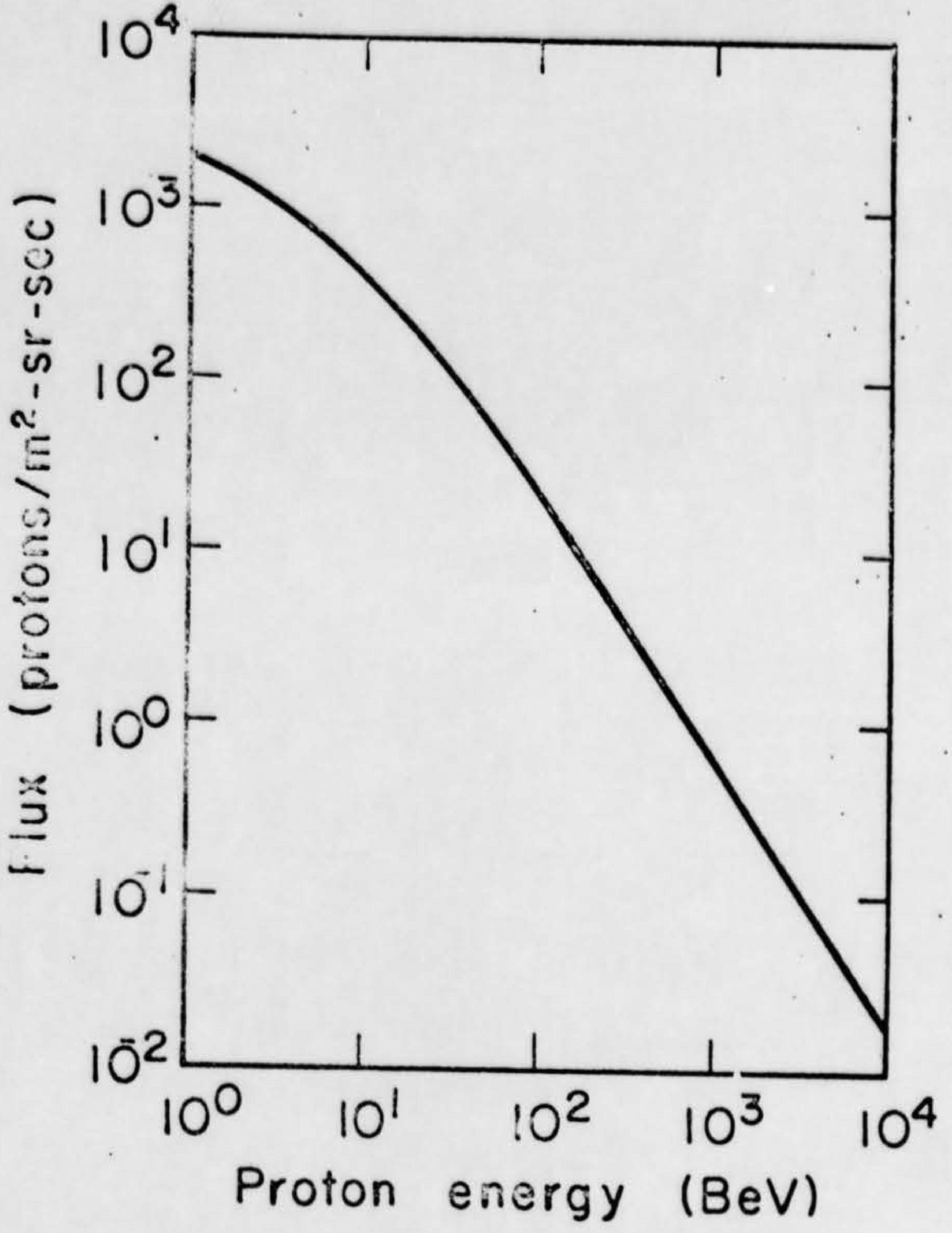

10^4
10^3
10^2
10^1
10^0
10^-1
10^-2
Flux (protons/m^2-sr-sec)
10^0
10^1
10^2
10^3
10^4
Proton energy (BeV)

Fig. 2

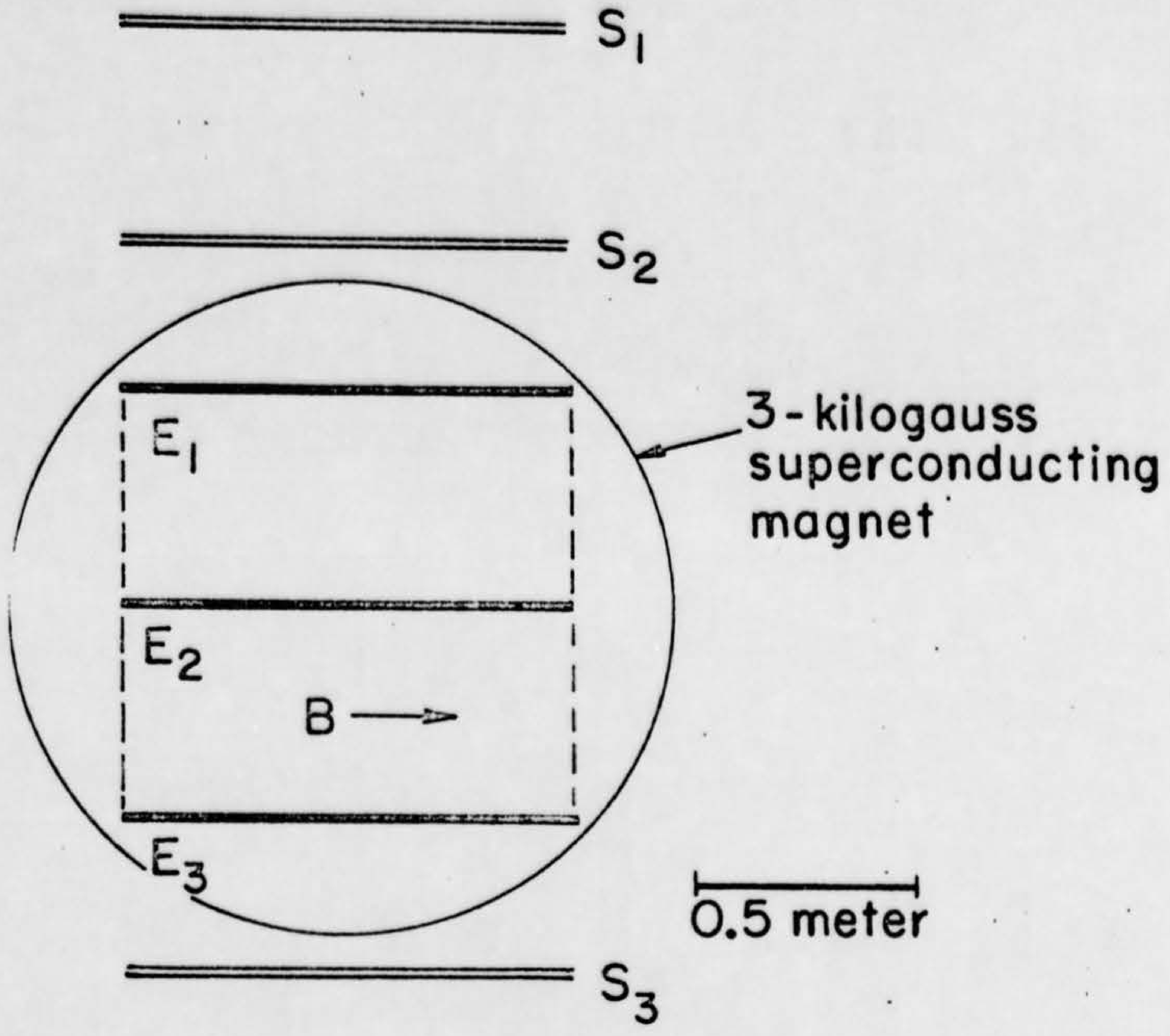

S_1
S_2
E_1
3-kilogauss superconducting magnet
E_2
B →
E_3
0.5 meter
S_3

Fig. 3

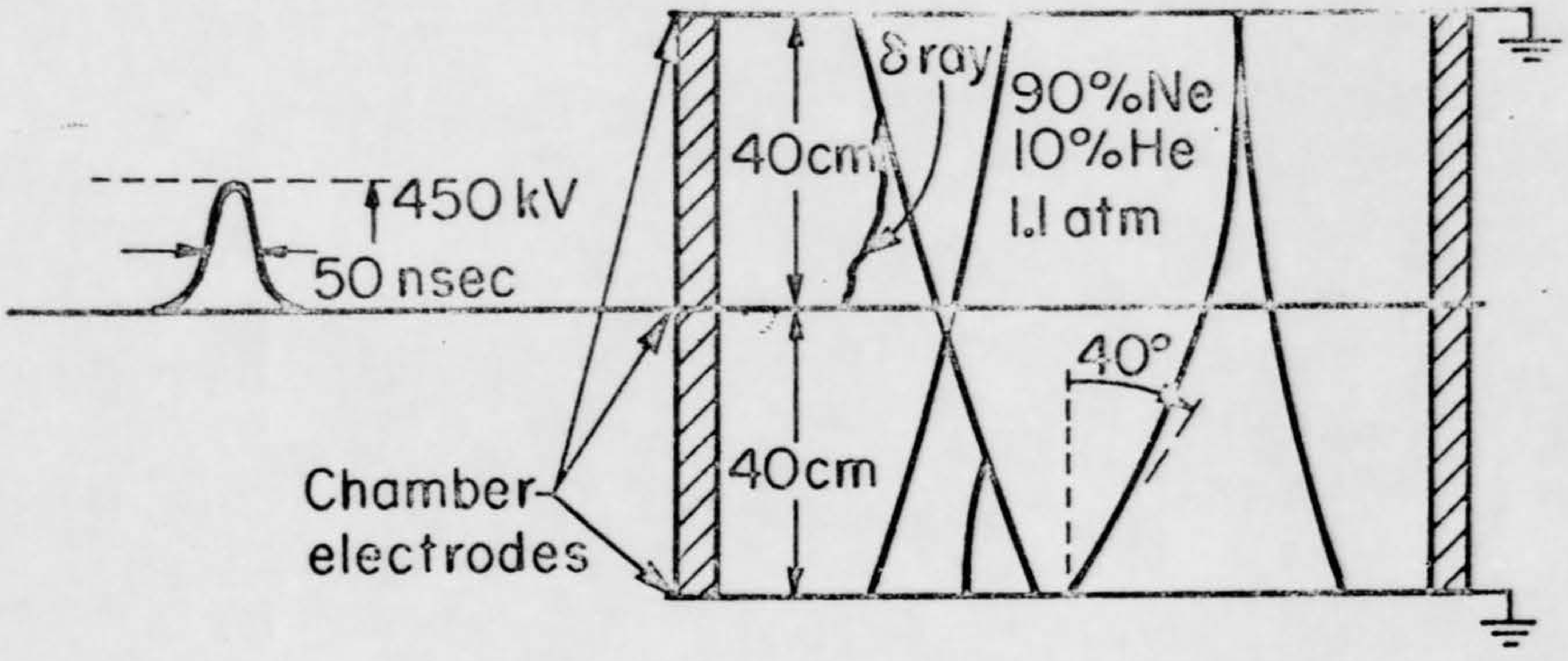

450 kV
50 nsec
40cm
40cm
δ ray
90%Ne
10%He
1.1 atm
40°
Chamber-
electrodes

Fig. 4

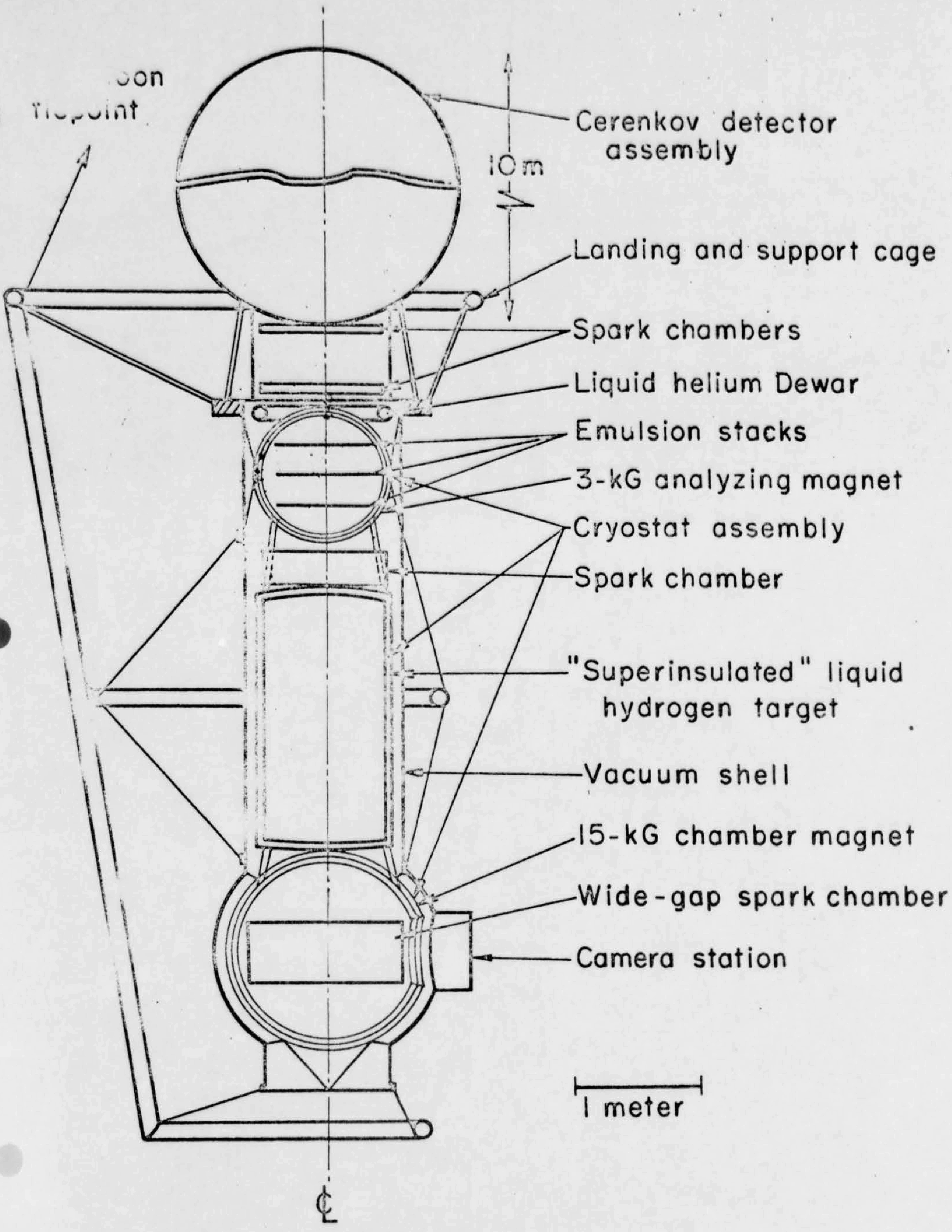
oon
Tiepoint
Cerenkov detector assembly
10 m
Landing and support cage
Spark chambers
Liquid helium Dewar
Emulsion stacks
3-kG analyzing magnet
Cryostat assembly
Spark chamber
"Superinsulated" liquid hydrogen target
Vacuum shell
15-kG chamber magnet
Wide-gap spark chamber
Camera station
1 meter
℄

Fig. 5

REFERENCES

1. L. W. Alvarez, Study of High Energy Interactions, using a "Beam" of Primary Cosmic Ray Protons, Alvarez physics group note 503, May 1964.

2. Report of the GAC-PSAC Panel on High Energy Accelerator Physics, Norman F. Ramsey, Chairman (April 1963).

3. A. J. Dessler, Penetrating Radiation, Chapter 3 of the Satellite Environment Handbook, Edited by Francis T. Johnson, Stanford University Press, 1961.

4. Marcel Schein, D. M. Haskin, E. Lohrmann, M. W. Teucher, Multiple Meson Production in Nucleon-Nucleon Interactions at Energies of 10^{12} ev, Proceedings of the Moscow Cosmic Ray Conference, Vol. I, July 6-11, 1959.

5. C. F. Powell, Summary Talk of Jet Sessions, Journal of the Physical Society of Japan, Vol. 17, Sup. A-III, pg. 492 (International Conference on Cosmic Rays and the Earth Storm).

6. J. Duthie, C. M. Fisher, P. H. Fowler, A. Naddoura, D. H. Perkins, K. Pinkau, H. H. Wills, Spectrum of γ-rays and Nuclear-Active Component of Air-showers at 11,000 meters, Proceedings of the Moscow Cosmic Ray Conference, Vol. I, July 6-11, 1959.

7. N. L. Grigorov, V. V. Guseva, N. A. Dobrotin, K. A. Kotelnikov, V. S. Murzin, S. V. Ryabikov, S. A. Slavatinsky, Studies of Nucleon-Nucleon Interactions at Energies of 2×10^{11} ev. Proceedings of the Moscow Cosmic Ray Conference, Vol. I, July 6-11, 1959.

8. C. F. Powell, discussion at the 1959 Moscow Cosmic Ray Conference, pg. 167, Proceedings of the Moscow Cosmic Ray Conference, Vol. I.

9. V. V. Guseva, N. A. Dobrotin, N. G. Zelevinskaya, K. A. Kotelnikov, A. M. Lebedev, S. A. Slavatinsky, Experimental Data on Nucleon-Nucleon Interactions at the Energy of Hundreds of GeV and Their Interaction, Journal of the Physical Society of Japan, Vol. 17, Sup. A-III, pg. 375 (International Conference on Cosmic Rays and the Earth Storm)

10. M. Miesowicz, Recent Studies on the Fire Ball Model, Journal of the Physical Society of Japan, Vol. 17, Sup. A-III, pg. 458 (International Conference on Cosmic Rays and the Earth Storm)

11. A.A. Emelyanov, I. L. Rosental, Interpretation of the Two-Center Model within the Hydrodynamical Theory, Journal of the Physical Society of Japan, Vol. 17, Sup. A-III, pg. 502, (International Conference on Cosmic Rays and the Earth Storm)

12. Proceedings of the 1963 Summer Study on Storage Rings, Accelerators, And Experimentation at Super-High Energies, Brookhaven National Laboratory report BNL 7534 (June 1963)

13. William Humphrey, Proposed Experimental Techniques for Use in High Altitude Particle Physics Experiments, Alvarez physics group note 504, May 1964

14. Y. Sekido, I. Kondo, T. Murayama, S. Mori, H. Okuda, S. Sakakibara, T. Makino, T. Honzawa, A Gas Cherenkov Cosmic-Ray Telescope, Journal of the Physical Society of Japan, Vol. 17, Sup. A-III, pg. 139 (International Conference on Cosmic Rays)

15. A. I. Alikhanian, T. L. Asatiani, E. M. Matevesian, A. A. Nazaryan, R. O. Sharkhatuniann, Observation of the Tracks of Fast Particles in a Two-Electrode Spark Chamber Located in a Magnetic Field, Physics Letters, Vol. 7, pg. 272 (1963)

16. Karl Strauch, Harvard Invited paper at the Washington Meeting (Session HG3, April 1964), and private communications.

17. J. E. Kunzler, E. Buehler, F. S. L. Hsu, J. E. Wernick, Superconductivity in 3Nb Sn at High Current Density in a Magnetic Field of 88 Kgauss Physical Review Letters, Vol. 6, pg. 89 (1961)

18. D.B. Montgomery, Current-carrying Capacity of Superconducting Nb-Zr Solenoids. Applied Physics Letters, Vol. 1, pg. 41 (1962)

19. B. S. Chandrasekhar, J. K. Hulm, Current-carrying Capacity of High Field Superconducting Solenoids. Applied Physics Letters, Vol. 2, pg. 43 (1962)

20. T. I. Smith, H. E. Rorshach Jr., Flux Quantization and Persistent Currents, Review of Modern Physics, Vol. 36, pg. 277 (1964)

21. Clarence Koii, Lockheed, Palo Alto, private communication

22. Clyde Taylor, Lawrence Radiation Laboratory, Livermore, private communication

Professional Qualifications

Luis W. Alvarez received his Bachelor of Science degree in 1932, a Master of Science degree in 1934, and his Ph.D. in 1936, all from the University of Chicago. In 1936 Dr. Alvarez joined the Radiation Laboratory of the University of California, where he is now a professor. He was on leave at the Radiation Laboratory of Massachusetts Institute of Technology from 1940 to 1943 and at the Los Alamos Laboratory of the Manhattan District from 1943 to 1945.

Professor Alvarez is a member of the National Academy of Sciences, American Philosophical Society, American Physical Society, and American Academy of Arts and Sciences. In 1946 he was awarded the Collier Trophy by the National Aeronautical Association for the development of the ground control approach, an aircraft landing system. In 1953 he was awarded the John Scott Medal and Prize by the city of Philadelphia, for the same work. In 1947 he was awarded the Medal for Merit. In 1960 he was named "California Scientist of the Year" for his research work on high-energy physics. In 1961 he was awarded the Einstein Medal for his contribution to the physical sciences. In 1963, he was awarded the Pioneer Award of the AIEEE, and in 1964, he was awarded the National Medal of Science, for contributions to high-energy physics.

At M.I.T., during the war, he was responsible for three important radar systems - the microwave early-warning system, the eagle high-altitude bombing system, and a blind landing system for civilian as well as military applications (GCA, mentioned above). While at the Los Alamos Laboratory, Dr. Alvarez developed the detonators for setting off the plutonium bomb. He flew as a scientific observer at both the Almagordo and Hiroshima explosions.

Dr. Alvarez is responsible for the design and construction of the Berkeley 40-foot proton linear accelerator, which was completed in 1947. Since that time the flight series which Dr. Delbouille proposed if in the Panel's view the flights are feasible and warranted by the scientific merit of the proposed experiments.

9. Request by Dr. Luis W. Alvarez of the Space Sciences Laboratory of the University of California for flight services -- Alvin L. Morris

Dr. Luis W. Alvarez of the Space Sciences Laboratory of the University of California at Berkeley has requested flight services on a series of high energy particle experiments. A detailed description of these experiments is enclosed, Appendix D, and Dr. W. E. Humphrey, an associate of Dr. Alvarez, has promised to be on hand to answer Panel questions.

The experiments proposed here will require very careful coordination between the experimenters and Facility personnel over an extended period. As now conceived, some developmental work will have to precede the first physics data gathering flight. The very powerful magnet must be given special protection; for example, we can not launch it with a ferrous launch vehicle in our usual fashion. The equipment is fragile, and we may have to develop special recovery techniques to prevent undue damage on landing. Special facilities, such as a well in which to store the sensitized plates prior to use, will be required.

We have endeavored in the past to conduct development programs which would enable us to meet most scientific ballooning requirements when they were presented to us. The requirements associated with Dr. Alvarez's experiment, although beyond our present capability, appear to be within reach. Further, though they appear to be the specialized requirements of one experiment now, that experiment will require an extended series of flights and it is probably the precursor of similar flights by others. Therefore we believe that we should not overemphasize the special nature of requirements associated with it. On the contrary, we believe that we should undertake the responsibility for providing the ballooning services to meet the requirements of the Alvarez group, seeking developmental funds from that group when unique techniques and equipment must be developed and tested for their program. NCAR must expect to fund those aspects of development which offer immediate significant improvements to general scientific ballooning. It would also expect to pay the fixed costs of operating the Ballooning Facility as it does now for all scientific flights, but it would not pay the cost of balloons, helium he has engaged in high-energy physics, using the 6 billion electron volt Bevatron at the University of California Radiation Laboratory. His main efforts have been concentrated on the development and use of large liquid hydrogen bubble chambers, and on the development of high-speed devices to measure and analyze the millions of photographs produced each year by the bubble chamber complex. The net result of this work has been the discovery by Dr. Alvarez's research group, of a large number of previously unknown fundamental particle resonances.

William E. Humphrey received the Ph. D. degree in physics from the University of California (Berkeley) in 1961 and joined the physics staff of the Lawrence Radiation Laboratory. Since that time he has been engaged in elementary particle physics research in the development of data analysis equipment and techniques. He has seven publications on physics and five publications on data analysis techniques.

APPENDIX E. UNIV.
OF ROCHESTER

APPENDIX E.

UNIVERSITY OF ROCHESTER SUGGESTION FOR
AN EQUATORIAL EXPEDITION.

THE UNIVERSITY OF ROCHESTER
Rochester, New York, 14627

Department of Physics
and Astronomy

August 4, 1965

Gentlemen:

We have now analyzed the results of our balloon flights on the IQSY-EQEX Expedition. Notwithstanding the fact that we obtained only 25% (one out of four) of the flights we wanted, we are so delighted with the results from the one flight and for the promise that it holds in gamma ray astronomy, that we should like to propose another equatorial expedition.

As a result of flying our spark chamber, triggered for gamma rays, at the equator, we are able to set upper limits to the fluxes from several sources of a few times 10^{-5} gammas per cm^2 sec. This is about a factor of 50 better than that obtained to date and is in large measure due to the low secondary background occurring at this latitude with the result that one is able to determine flux limits at a lower level from point sources.

There are quite a few interesting fluxes to look at at the equator and some further down in southern latitudes and we believe that another expedition is certainly merited at this time. At the equator we flew at 6-1/2 grams and flying at a higher altitude would enable us to lower our limits by a factor of two at least or alternately going to a somewhat higher (or lower) latitude, for example Australia, but obtaining a higher altitude would enable us to make statements on fluxes comparable with those obtained at Hyderabad.

We would like at this time to ascertain your interest in participating in such an expedition, since clearly establishing the logistic support for one group or many does not represent that great a difference in cost and effort and the more people from the scientific community that could benefit, the more likely it is to obtain the necessary funding.

We would propose, that roughly speaking, the expedition be scheduled for about two years from now to give appropriate lead time for all parties involved and also so that we could build upon, in a meaningful way, the experience obtained from the last expedition. Preliminary talks with NCAR have indicated they would be willing to play the same role as they did for IQSY-EQEX, and Rochester would be willing to take the lead in responsibility for the formal planning and submission for support from appropriate government agencies. In first approximation, we would ask for support from the NSF and from NASA. We should very much like to have an indication of your interest in participating in such an endeavor and would request a reply by September 1.

We are enclosing a list of people to whom this letter is being sent. We would appreciate your bringing to our attention any omissions we may have made. The list enclosed represents principally those involved in the IQSY-EQEX Expedition.

Sincerely yours,

M. F. Kaplon /s
M. F. Kaplon

J.G.M. Duthie /s
J.G.M. Duthie

K. Anderson
C. L. Deney
B. R. Dennis
J.G.M. Duthie
E. Ehrlich
J. T. Ely
R. Fleischer
J. H. Fregeau
M. W. Friedlander
G. M. Frye
D. E. Guss
L. Katz
S. A. Korff
R. S. Kubara
V. E. Lally
L. Machta
K. G. McCraken
F. McDonald
P. Meyer
A. Moore
E. Ney
M. A. Pomerantz
L. O. Quan
S. Ruttenberg
M. M. Shapiro
B. Stiller
E. P. Todd
C. J. Waddington
J. R. Winkler

and other similar assignable costs.

The unusual requirements of this request for services makes it easy to forget the usual operational requirements. These may be summarized as follows: 1) flight altitude -- 85,000 to 100,000 feet, 2) flight duration -- up to 24 hours, 3) approximate weight -- 8,000 pounds, 4) geographical area -- Southern U.S., 5) season -- any time of the year, 6) accelerations on load at launch -- less than 1g, 7) accelerations on landing -- less than 10g, 8) number of flights -- 4 engineering and several physics flights spread over 3 to 7 years.

The Panel is requested to approve NCAR participation in the flight series which Dr. Alvarez proposes if in the Panel's view the flights are feasible and warranted by the scientific merit of the experiments proposed.

10. <u>Water vapor measurement comparisions</u> -- John W. Sparkman

This program is a continuation of a program started in November 1962. A meeting was held in Washington, D.C. on 7 and 8 October 1965 to explore current interest. A resumé of the status of the program and plans for its future will be given by Mr. Sparkman at the meeting. Panel comments are invited.

11. <u>Another equatorial ballooning expedition suggested</u> -- Robert S. Kubara

A second equatorial expedition has been suggested by Doctors M. F. Kaplon and J. G. M. Duthie of the University of Rochester. A copy of a letter sent by them to the scientists listed is enclosed, Appendix E. NCAR has offered to provide ballooning advice and perhaps ballooning management assistance if it is deemed essential. Panel comments are invited.

12. <u>Election of Chairman</u>.

13. <u>Date and time for next meeting</u>.

END OF AGENDA